THIS DRAWING IS UNPUBLISHED. RELEASED FOR PUBLICATION ,19 .
© COPYRIGHT 19 BY AMP INCORPORATED. ALL RIGHTS RESERVED.

LOC	DIST
AA	22

REVISIONS

P	LTR	DESCRIPTION	DATE	DWN	APVD
	M	REDWN & REV; EC 0210-0111-95	5-11-95	GG	NJ

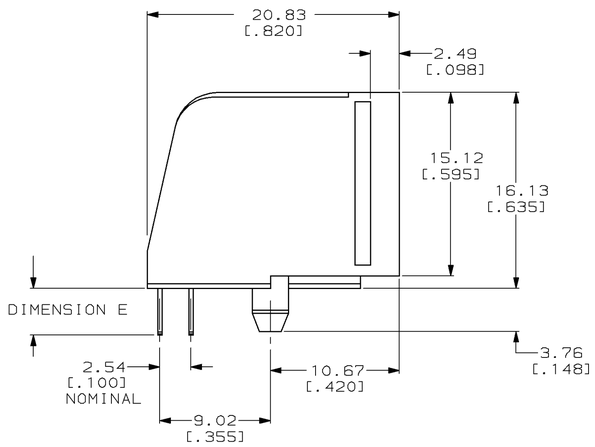

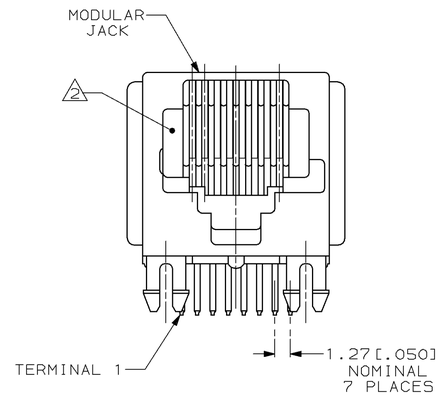

1. MATERIAL: HOUSING PBT POLYESTER, BLACK. TERMINAL-0.35 [.0138] THICK PHOS-BRONZE PLATED WITH 1.27um [.000050] THICK HARD GOLD IN LOCALIZED GOLD PLATE AREA AND 2.03um [.000080] THICK TIN LEAD IN SOLDER AREA OVER 1.27um [.000050] THICK NICKEL UNDERPLATE.

2. CAVITY CONFORMS TO FCC RULES AND REGULATIONS PART 68 AND REA BULLETIN 345-81, PE-76 SPECIFICATION FOR MODULAR TELEPHONE HARDWARE.

3. ALL DIMENSIONS SHOWN ARE MAXIMUM UNLESS OTHERWISE SPECIFIED.

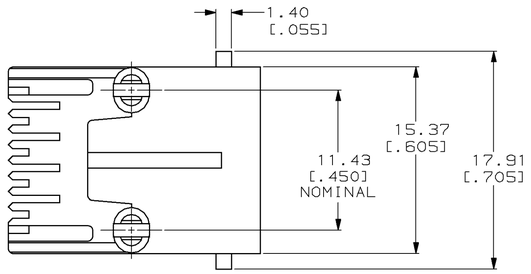

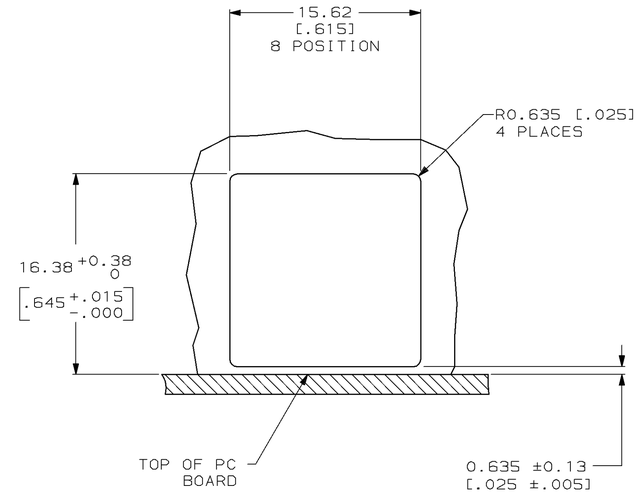

SUGGESTED PANEL CUTOUT

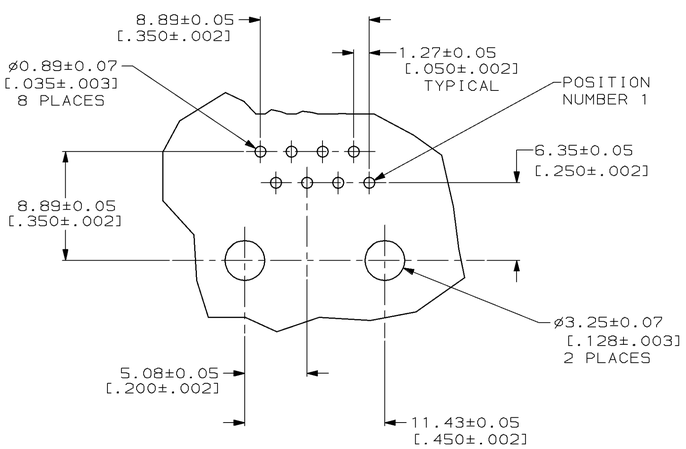

SUGGESTED PRINTED CIRCUIT BOARD LAYOUT

NONCOMPONENT SIDE SHOWN

DIMENSION E	CONTACTS	PART NUMBER
3.20 [.126]	8	520252-5
4.32 [.170]	8	520252-4

THIS DRAWING IS A CONTROLLED DOCUMENT FOR AMP INCORPORATED. IT IS SUBJECT TO CHANGE AND THE CONTROLLING ENGINEERING ORGANIZATION SHOULD BE CONTACTED FOR THE LATEST REVISION.

DIMENSIONS: MM [INCHES]

TOLERANCES UNLESS OTHERWISE SPECIFIED.
0 PLC ±-
1 PLC ±-
2 PLC ±-
3 PLC ±-
4 PLC ±-
ANGLES ±-

MATERIAL 1
FINISH 1

DWN G. GARRETT 05-11-95
CHK N. JONES 5-23-95
APVD E. LAURER 5-30-95
PRODUCT SPEC 108-1163
APPLICATION SPEC 114-2048
WEIGHT -
CUSTOMER DRAWING

AMP Incorporated
Harrisburg, PA 17105-3608

NAME
MODULAR JACK ASSEMBLY,SIDE ENTRY,
8 POSITION,KEYED,FLANGELESS,WITH PANEL STOPS

SIZE	CAGE CODE	DRAWING NO
A1	00779	C-520252

SCALE 4:1 SHEET 1 OF 1 REV M