Top View of Assembly

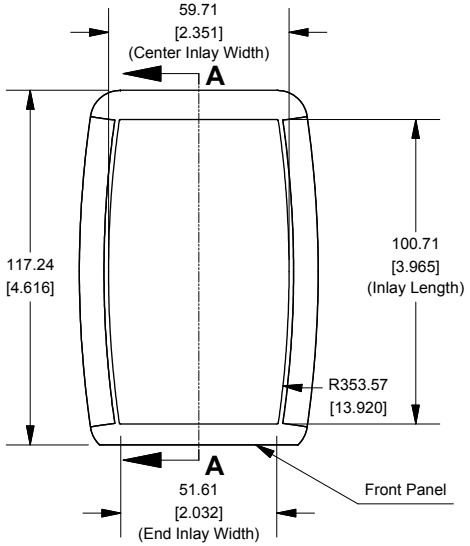

SECTION A-A
(Side View Inside Assembly)

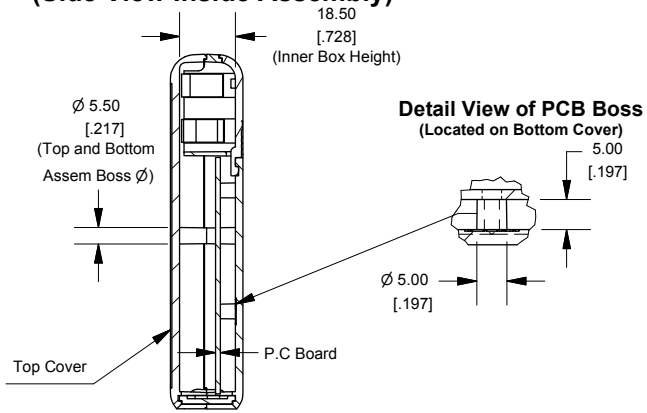

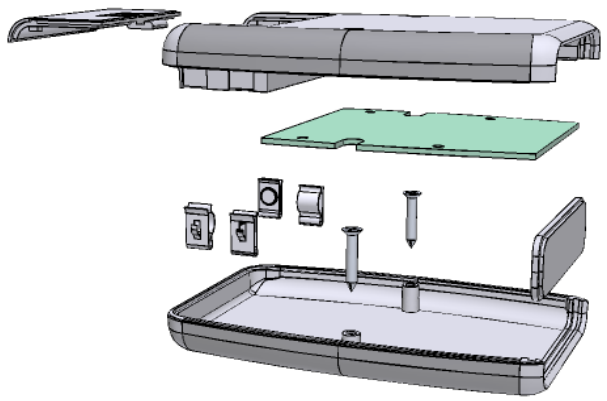

End View of Assembly

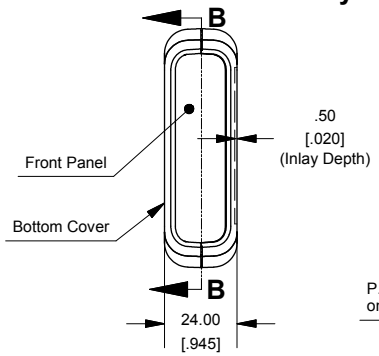

SECTION B-B
(Inside of Bottom Cover)

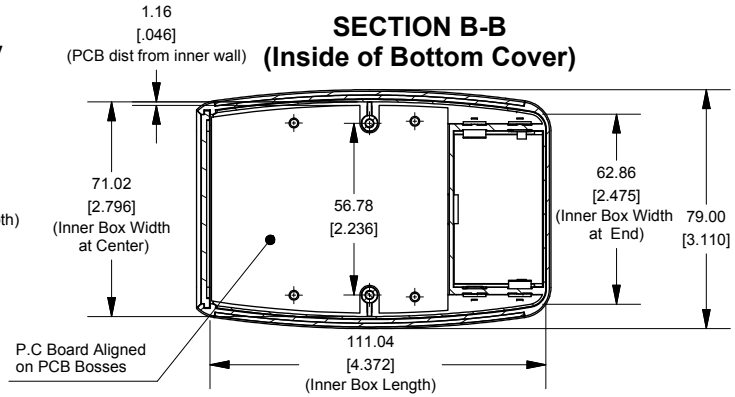

Front/Rear Panel
(Dashed Line Indicates Viewing Area)

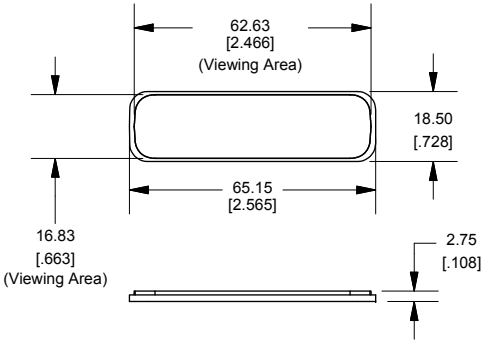

Maximum P.C. Board Size

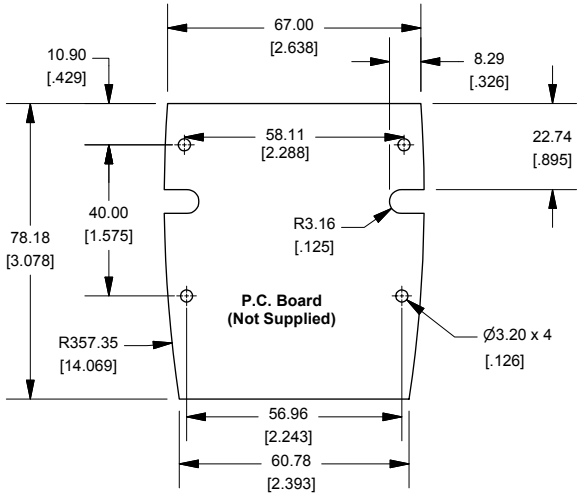

Enclosures can be Factory Modified (Milling, Drilling, Printing etc.)
Solid models of this enclosure available in STEP or IGES.
Contact Factory mjm@hammondmfg.com

NOTE	
Enclosure molded from GP ABS (UL94-HB) plastic.	
Purchased assembly includes top and bottom cover, front plastic panel, battery door, battery spring clips, 9V adapter and 2 cover screws.	
PART NUMBERS	
1553B Battery Enclosure	
Black Enclosure/Grey Over-mold	1553BBKBAT
Grey Enclosure/Grey Over-mold	1553BGYBAT
Red Enclosure/Black Over-mold	1553BRDBKBAT
Translucent Blue Enclosure/Black Over-mold	1553BTBUBKBAT
Yellow Enclosure/Black Over-mold	1553BYLBKBAT
ACCESSORIES	
Cover Screws (Pkg 100) [#4 x 5/8" self-tapping oval head (15.9mm)]	1593MS100 (Silver) 1593MS100BK (Black)
P.C. Board Screws [#4 x 1/4" self-tapping (6.4mm)]	1593ATS50 (Pkg 50) 1593ATS100 (Pkg 100)
Belt or Pocket Clip	1599CLIP (Black) 1599CLIPGY (Grey)

HAMMOND MANUFACTURING™

1553B-BAT

www.hammondmfg.com