THIS DRAWING IS UNPUBLISHED. RELEASED FOR PUBLICATION -.02-14-05
© COPYRIGHT - BY TYCO ELECTRONICS CORPORATION. ALL RIGHTS RESERVED.

LOC	DIST
GP	00

REVISIONS

P	LTR	DESCRIPTION	DATE	DWN	APVD
	B	REVISED PER ECO-08-010444	17DEC2008	ZMR	SLB

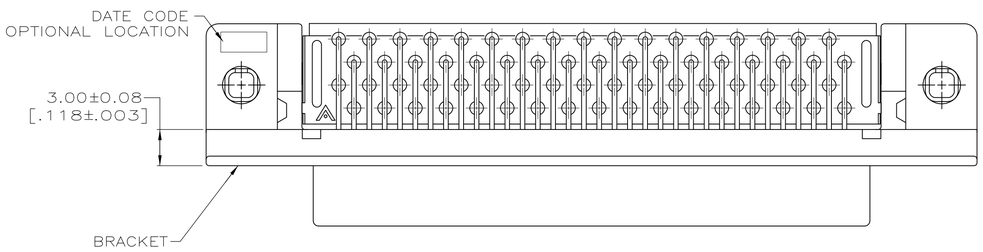

1. CONTACTS: PHOSPHOR BRONZE
HOUSING & PIN SPACER: UL 94V-0 RATED, THERMOPLASTIC, BLACK
BRACKET: ZINC
SHELL: CARBON STEEL
BOARDLOCKS: COPPER ALLOY

2. CONTACTS: EITHER 0.76μm [.000030] MIN GOLD PLATE FOR A LENGTH OF 0.64 [.025] MAX, 0.13 [.005] MIN FROM MATING END OR GOLD FLASH OVER PALLADIUM NICKEL PLATE, 0.76μm [.000030] MIN TOTAL FOR A LENGTH OF 0.64 [.025] MAX, 0.13 [.005] MIN FROM MATING END. 3.81μm [.000150] MIN TIN ON OPPOSITE END FOR A LENGTH OF 3.84 [.151] MIN, BOTH OVER 1.27μm [.000050] MIN NICKEL.
SHELL: 5.08μm [.000200] MIN NICKEL OVER 1.27μm [.000050] MIN COPPER.
BRACKET: 2.54μm [.000100] MIN NICKEL OVER 5.08μm [.000200] COPPER.
BOARDLOCKS: 3.81μm [.000150] MIN TIN OVER 1.27μm [.000050] MIN NICKEL.

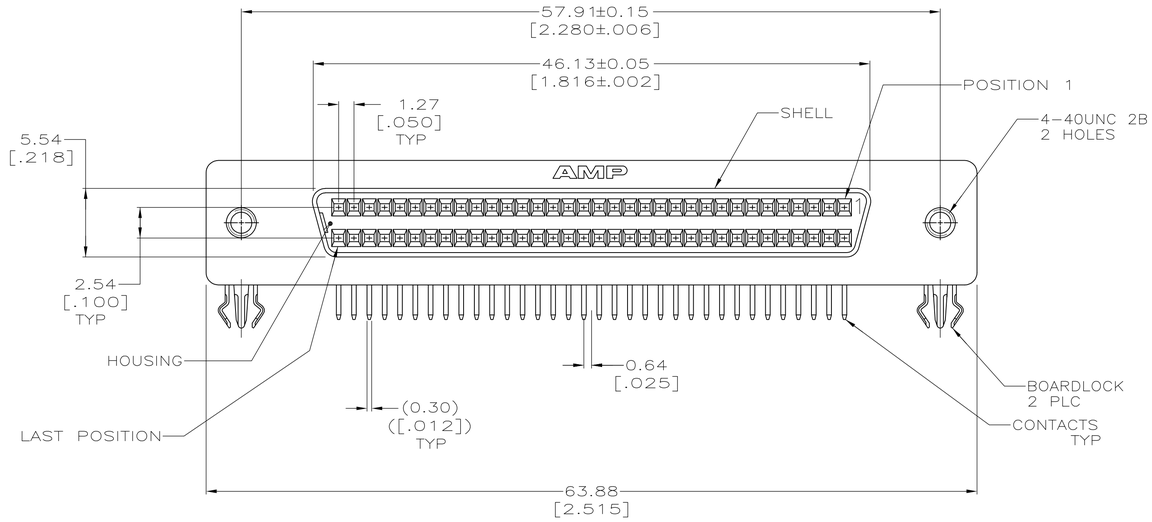

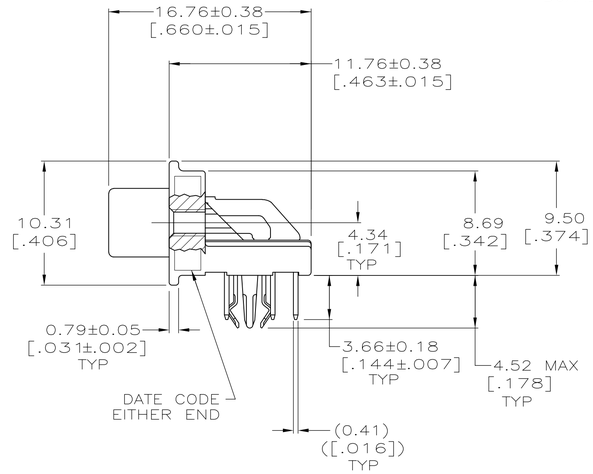

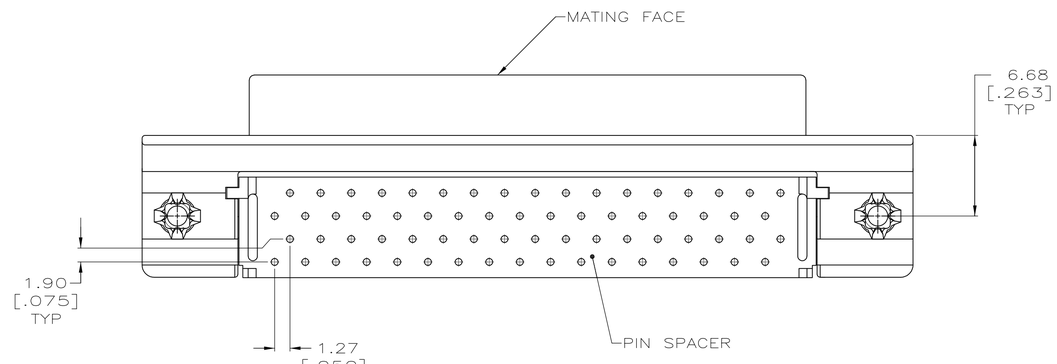

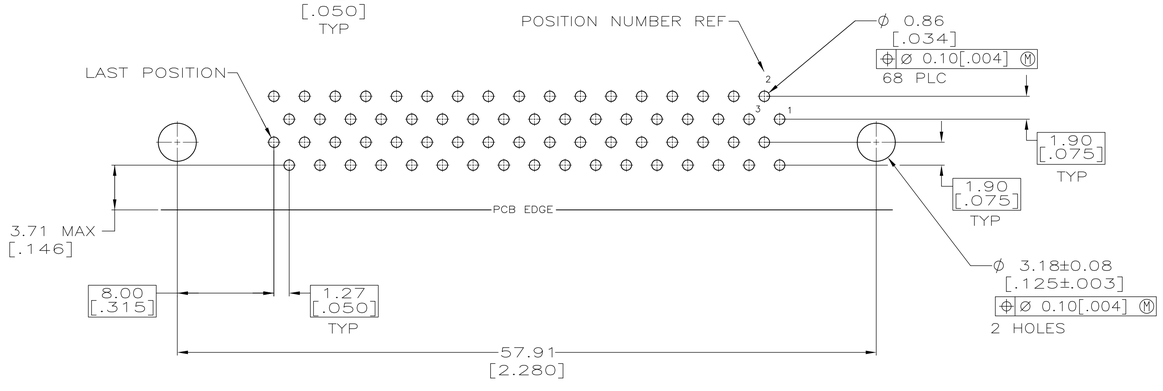

P.C.BOARD MOUNTING DIMENSIONS
CONNECTOR SIDE
P.C.BOARD THICKNESS 2.36±0.23 [.093±.009]

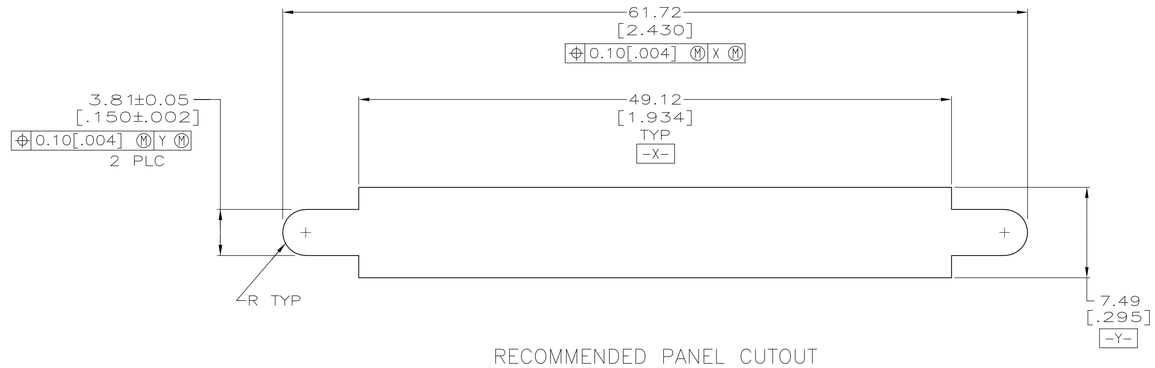

RECOMMENDED PANEL CUTOUT

68	5787928-7
NO OF POSN	PART NUMBER

COPYRIGHT 2005
TYCO ELECTRONICS CORP
ALL RIGHTS RESERVED

THIS DRAWING IS A CONTROLLED DOCUMENT.

DIMENSIONS: mm[INCHES]

TOLERANCES UNLESS OTHERWISE SPECIFIED:
0 PLC ± -
1 PLC ± -
2 PLC ± 0.13 [.005]
3 PLC ± -
4 PLC ± -
ANGLES ± -

MATERIAL 1
FINISH 2

DWN L. VARELA - DOCK5 02-14-05
CHK S. SHUEY 02-14-05
APVD M. WALMSLEY 02-14-05
PRODUCT SPEC 108-1228
APPLICATION SPEC 114-40029
WEIGHT -

Tyco Electronics
Tyco Electronics Corporation
Harrisburg, Pa 17105-3608

NAME
RECEPTACLE ASSEMBLY, SHIELDED, RIGHT ANGLE, .050 SERIES, AMPLIMITE

SIZE	CAGE CODE	DRAWING NO	RESTRICTED TO
A1	00779	C-5787928	-

CUSTOMER DRAWING | SCALE 4:1 | SHEET 1 OF 1 | REV B