THIS DRAWING IS UNPUBLISHED. RELEASED FOR PUBLICATION MAR ,2004.
© COPYRIGHT 2004 By – ALL RIGHTS RESERVED.

LOC	DIST
E	B

REVISIONS

P	LTR	DESCRIPTION	DATE	DWN	APVD
	C	ECO-11-003575	15APR2011	RZ	MY

NOTES

1. PACKAGING: 50 PCS/TRAY, 20 TRAYS/CTN
2. PACKAGING: SINGLE PACK, 1PC/BAG, 100 BAGS/BOX, 10 BOXES/CTN
3. TIN PLATING
4. Ni PLATING
5. PACKAGING: 100 PCS/BAG, 1BAG/BOX, 10 BOXES/CTN

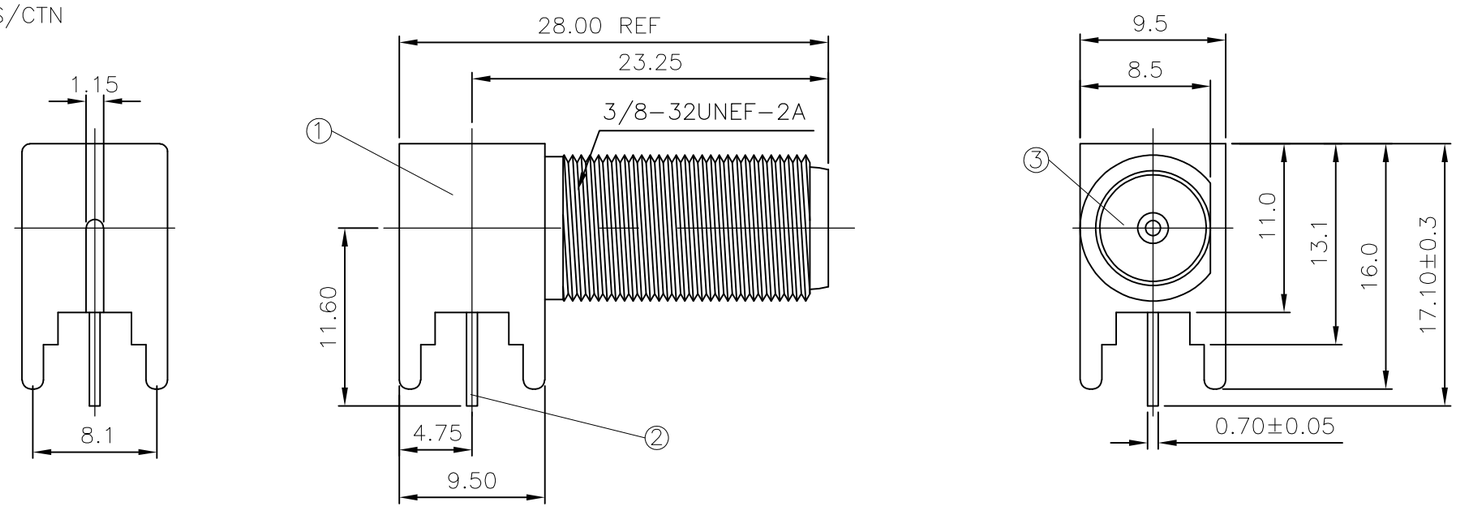

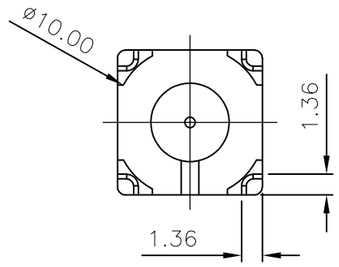

RECOMMENDED PCB LAYOUT WITH MOUNTING POSTS

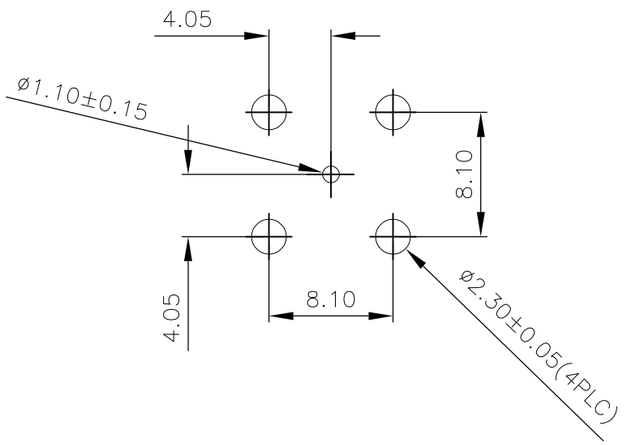

RECOMMENDED MOUNTING HOLE

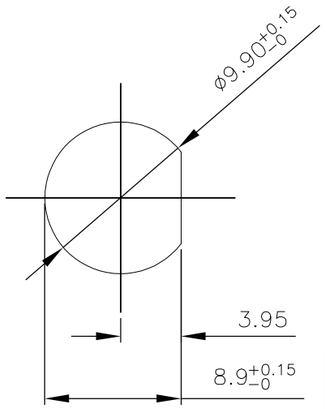

					1	1	1	TPX	INSULATOR	3
					1	1	1	PHOS BRONZE (3)	CONTACT	2
					1	1	1	ZINC ALLOY (4)	BODY	1
					5--2	5--1	5--0	MATERIAL	DESCRIPTION	ITEM
					(5)	(2)	(1)			
QUANTITY PER ASSY								PARTS LIST		

THIS DRAWING IS A CONTROLLED DOCUMENT.

DIMENSIONS: mm

TOLERANCES UNLESS OTHERWISE SPECIFIED:

0 PLC	± 0.5
1 PLC	± 0.3
2 PLC	± 0.2
3 PLC	± –
4 PLC	± –
ANGLES	± –

MATERIAL: –

FINISH: –

DWN ANSON MA 14FEB09
CHK RITA ZUO 14FEB09
APVD BOB ZHAO 14FEB09
PRODUCT SPEC 108-112000
APPLICATION SPEC —
WEIGHT —

TE Connectivity

NAME
F SERIES CONNECTOR ELBOW JACK PCB
–
–

SIZE	CAGE CODE	DRAWING NO	RESTRICTED TO
A3	00779	C-1634540	—

CUSTOMER DRAWING

SCALE	SHEET	REV
NTS	1 OF 1	C