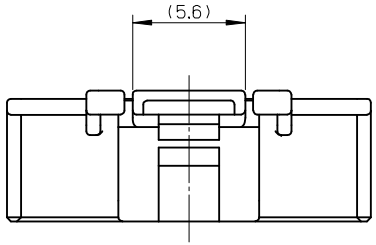

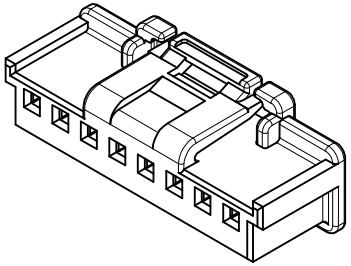

NOTES

1. 材質:PBT UL94V-0
   MATERIAL: PBT UL94V-0
2. 色:白、黒
   COLOR: WHITE, BLACK
3. 適合端子:50212, 50372, 56161, 560085シリーズ
   APPLICABLE TERMINAL: 50212, 50372, 56161, 560085 SERIES
4. 嵌合相手:502352, 560020シリーズ
   MATES WITH: 502352, 560020 SERIES
5. ELV及びRoHS適合品
   ELV AND RoHS COMPLIANT
6. 一般公差
   GENERAL TOLERANCES
   10 UNDER: 0.2
   10 OVER 30 UNDER: 0.25
   30 OVER: 0.3
   ANGULAR: ±3°

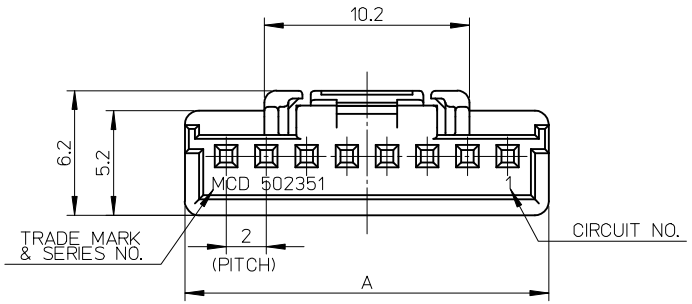

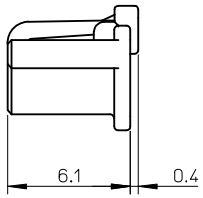

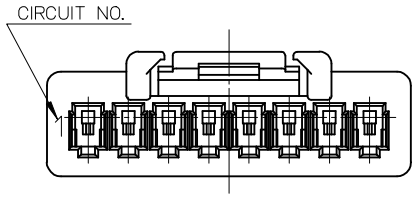

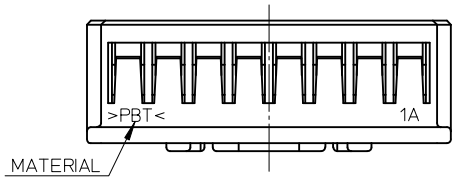

8CKTS

COLOR	A	MATERIAL NO.	CKTS
BLACK			15
			14
			13
			12
			11
			10
			9
	18.1	502351-0801	8
	16.1	502351-0701	7
	14.1	502351-0601	6
	12.1	502351-0501	5
	10.1	502351-0401	4
	8.1	502351-0301	3
	8.0	502351-0201	2

COLOR	A	MATERIAL NO.	CKTS
NATURAL	32.1	502351-1500	15
	30.1	502351-1400	14
	28.1	502351-1300	13
	26.1	502351-1200	12
	24.1	502351-1100	11
	22.1	502351-1000	10
	20.1	502351-0900	9
	18.1	502351-0800	8
	16.1	502351-0700	7
	14.1	502351-0600	6
	12.1	502351-0500	5
	10.1	502351-0400	4
	8.1	502351-0300	3
	8.0	502351-0200	2

REVISED
EC NO: JTR2016-0015
DRWN:KNAGAI02 2016/03/07
CH'KD:HKOMATSU 2016/03/07
APPR:MAYAMAMOTO 2016/03/08
DESCRIPTION
REV
H

QUALITY SYMBOLS
F_A=0
F_C=0
F_P=0

GENERAL TOLERANCES (UNLESS SPECIFIED)

	mm	INCH
4 PLACES	± ---	± ---
3 PLACES	± ---	± ---
2 PLACES	± ---	± ---
1 PLACE	± ---	± ---
0 PLACE	± ---	± ---
ANGULAR	± - °	

DRAFT WHERE APPLICABLE MUST REMAIN WITHIN DIMENSIONS

DIMENSION STYLE: MM ONLY
SCALE: 4:1
DESIGN UNITS: METRIC
THIRD ANGLE PROJECTION

DRAWN BY: SHSHIBATA DATE: 2007/12/18
CHECKED BY: HKOMATSU DATE: 2007/12/18
APPROVED BY: MAYAMAMOTO DATE: 2010/12/02
MATERIAL NO.: SEE CHART

TITLE: 2.0MM PITCH WIRE TO BOARD CONN. RECEPTACLE HOUSING

molex

DOCUMENT NO.: SD-502351-001
SHEET NO.: 1 OF 3
SIZE: A3

THIS DRAWING CONTAINS INFORMATION THAT IS PROPRIETARY TO MOLEX INCORPORATED AND SHOULD NOT BE USED WITHOUT WRITTEN PERMISSION

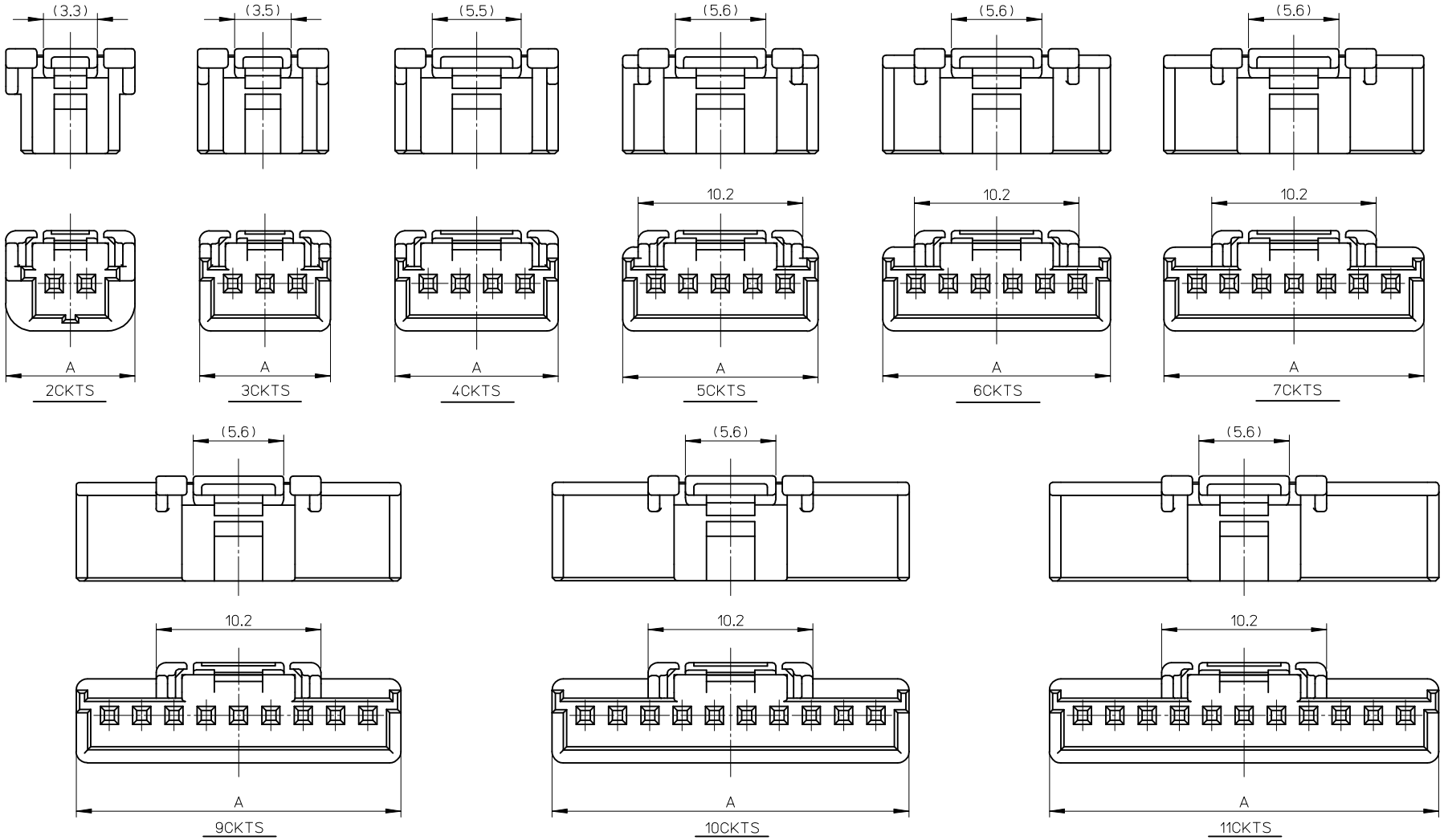

REVISED			
EC NO: JTR2016-0015			
DRWN:KNAGAI02	2016/03/07		
CH'KD:HKOMATSU	2016/03/07		
APPR:MAYAMAMOTO	2016/03/08		
REV	DESCRIPTION		
H			

QUALITY SYMBOLS

F_A	=0
F_C	=0
F_P	=0

GENERAL TOLERANCES (UNLESS SPECIFIED)

	mm	INCH
4 PLACES	± ---	± ---
3 PLACES	± ---	± ---
2 PLACES	± ---	± ---
1 PLACE	± ---	± ---
0 PLACE	± ---	± ---
ANGULAR ± - °		

DRAFT WHERE APPLICABLE MUST REMAIN WITHIN DIMENSIONS

DIMENSION STYLE: MM ONLY	SCALE: 4:1	DESIGN UNITS: METRIC	THIRD ANGLE PROJECTION
DRAWN BY: SHSHIBATA	DATE: 2007/12/18	TITLE: 2.0MM PITCH WIRE TO BOARD CONN. RECEPTACLE HOUSING	
CHECKED BY: HKOMATSU	DATE: 2007/12/18		
APPROVED BY: MAYAMAMOTO	DATE: 2010/12/02	molex	
MATERIAL NO.: SEE CHART		DOCUMENT NO.: SD-502351-001	SHEET NO.: 2 OF 3
SIZE: A3	THIS DRAWING CONTAINS INFORMATION THAT IS PROPRIETARY TO MOLEX INCORPORATED AND SHOULD NOT BE USED WITHOUT WRITTEN PERMISSION		

tb_frame_A3_P_AM_T
Rev. G 2012/01/11

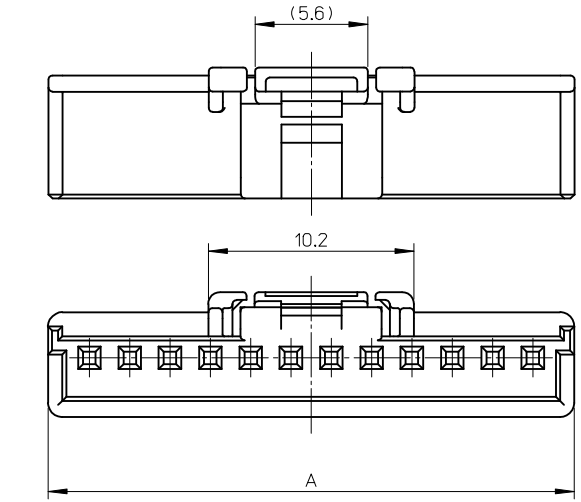

12CKTS

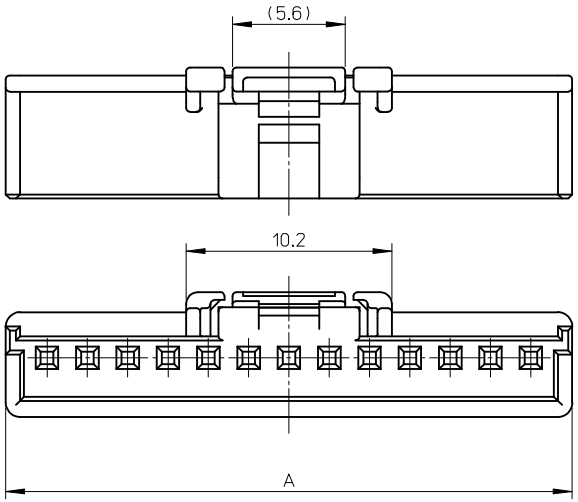

13CKTS

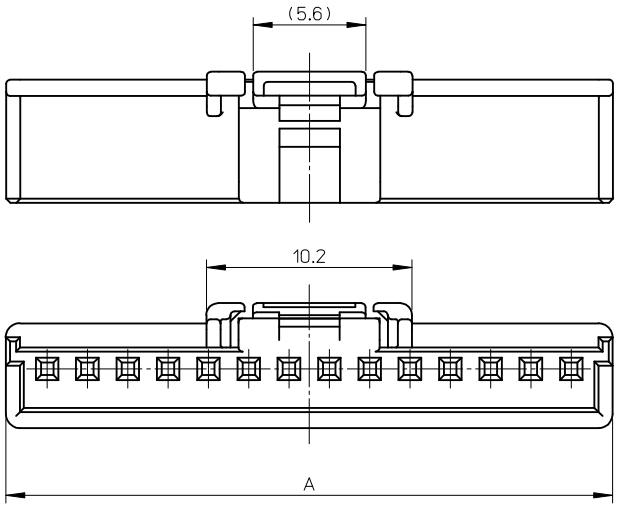

14CKTS

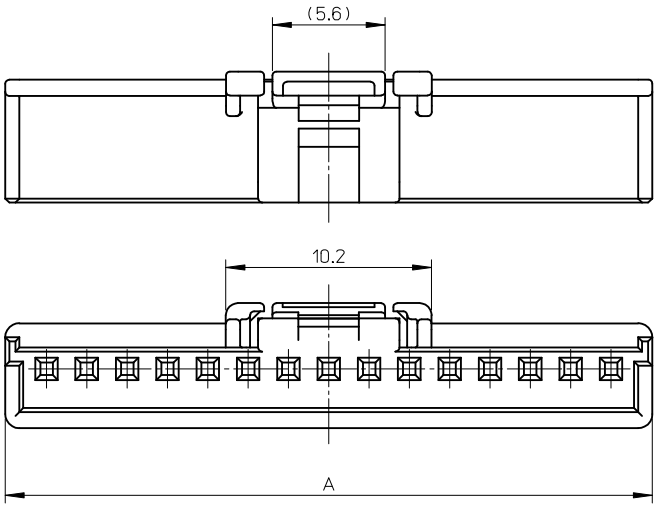

15CKTS

REVISED			
EC NO: JTR2016-0015			
DRWN:KNAGAI02	2016/03/07		
CH'KD:HKOMATSU	2016/03/07		
APPR:MAYAMAMOTO	2016/03/08		
H		REV	DESCRIPTION

QUALITY SYMBOLS

E =0

C =0

P =0

GENERAL TOLERANCES (UNLESS SPECIFIED)

	mm	INCH
4 PLACES	± ---	± ---
3 PLACES	± ---	± ---
2 PLACES	± ---	± ---
1 PLACE	± ---	± ---
0 PLACE	± ---	± ---
ANGULAR ± - °		

DRAFT WHERE APPLICABLE MUST REMAIN WITHIN DIMENSIONS

DIMENSION STYLE: MM ONLY	SCALE: 4:1	DESIGN UNITS: METRIC	THIRD ANGLE PROJECTION
DRAWN BY: SHSHIBATA	DATE: 2007/12/18	TITLE: 2.0MM PITCH WIRE TO BOARD CONN. RECEPTACLE HOUSING	
CHECKED BY: HKOMATSU	DATE: 2007/12/18		
APPROVED BY: MAYAMAMOTO	DATE: 2010/12/02	molex	
MATERIAL NO.: SEE CHART		DOCUMENT NO.: SD-502351-001	SHEET NO.: 3 OF 3
SIZE: A3			

THIS DRAWING CONTAINS INFORMATION THAT IS PROPRIETARY TO MOLEX INCORPORATED AND SHOULD NOT BE USED WITHOUT WRITTEN PERMISSION