Alle Rechte vorbehalten/ *All rights reserved*

Mating face according to MIL-C-24308 / DIN 41 652 / CECC 75301-802

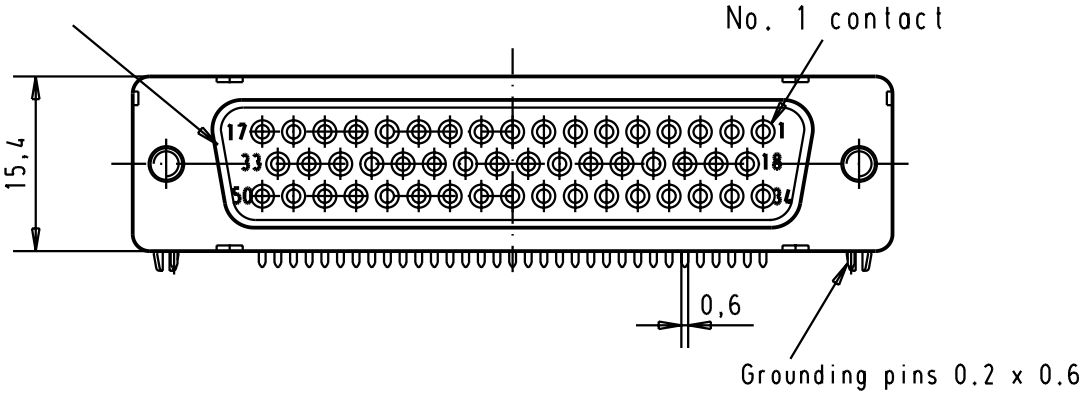

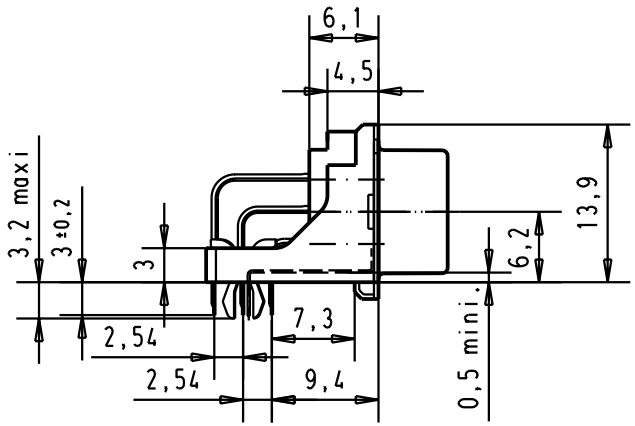

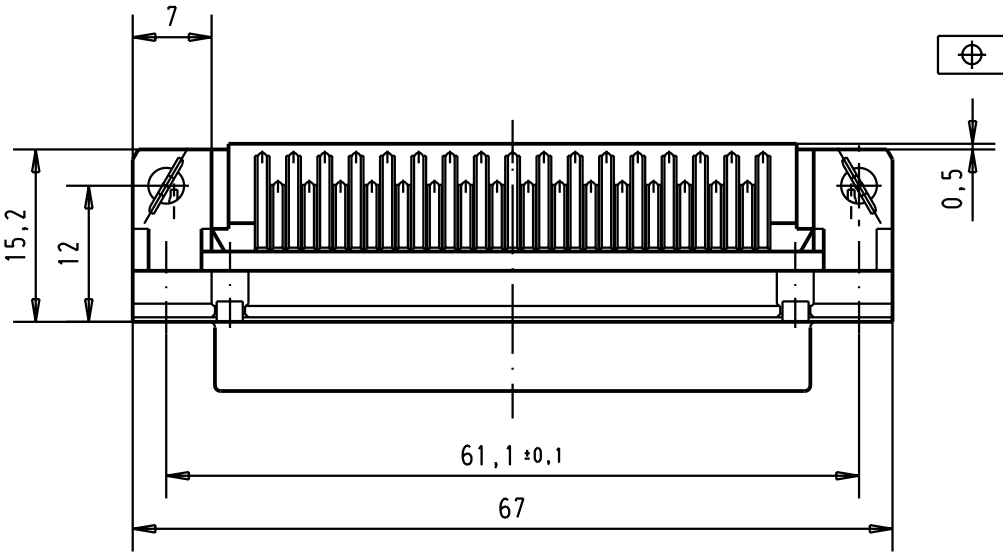

Mounting force on Printed board : 25 - 80 N

Printed board layout(1,6±0,2 thick)
View component side

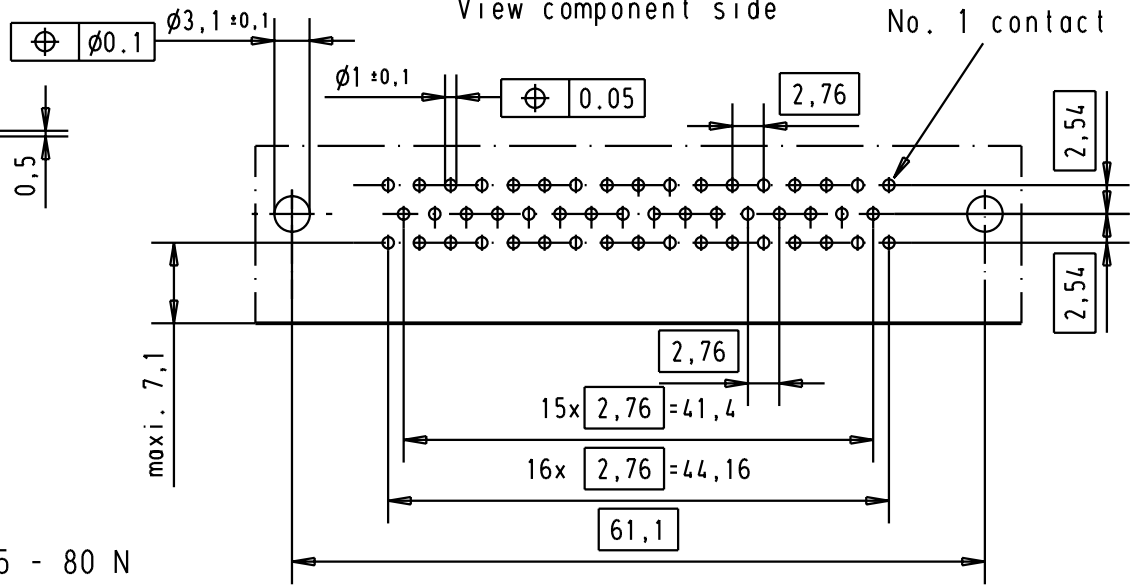

Part number	nut thread	Performance level	Mod.	Dat.	Name
09 66 552 6615	M3	2			
09 66 552 7615	M3	3			
09 66 552 5615	M3	0,76 µm Au			
09 66 552 6616	4-40 UNC	2			
09 66 552 7616	4-40 UNC	3	31084	04/SEP/02	YT
09 66 552 5616	4-40 UNC	0,76 µm Au	29733	23-NOV-01	JB

	Dat.	Name
Detail.	23-NOV-01	JB
Insp.		
Stand.		

All Dim. in mm
Orig. Size DIN A 4

D-Sub female low profile
50 poles with solder pins,
nuts,board lock and
grounding pins

Maßstab/ *Scale* 1,5:1

HARTING EURL
F-95972 Paris

TB 09 66 552 X61x

Sub.

Blatt/ *Page* 2