MICRO SWITCH
a Honeywell Division
FED. MFG. CODE 91929

# SWITCH – BASIC

CATALOG LISTING
1DM176

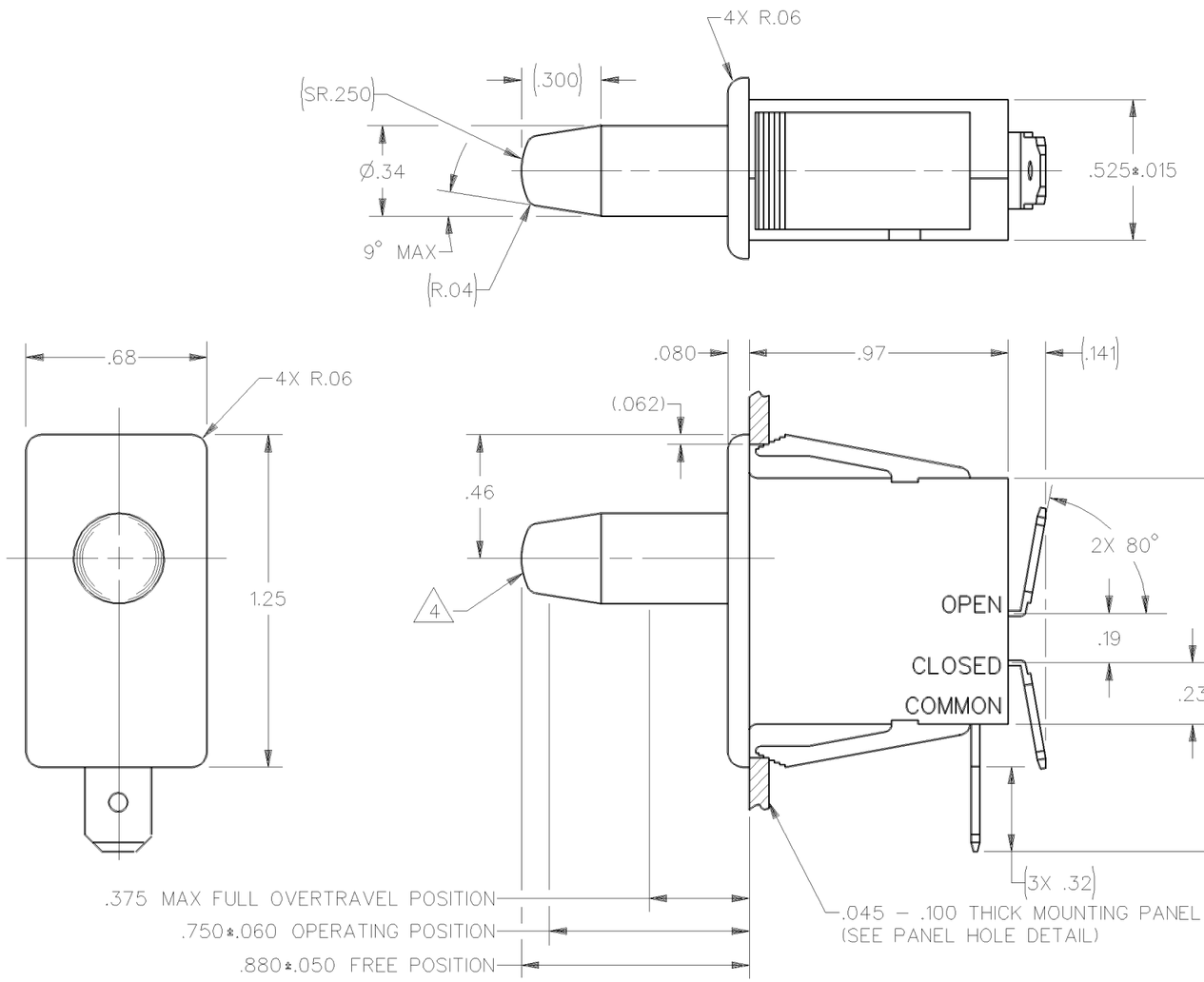


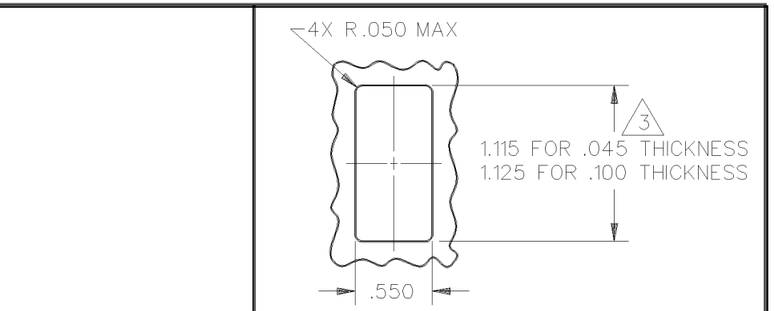


PANEL HOLE DETAIL
SCALE FULL

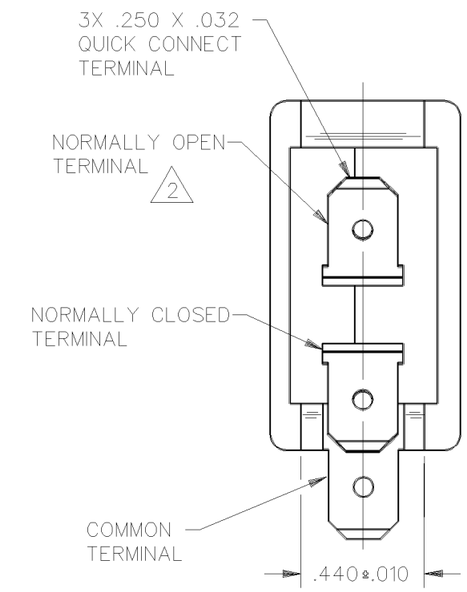


THIS DRAWING COVERS A PROPRIETARY ITEM AND IS THE PROPERTY OF MICRO SWITCH. A DIVISION OF HONEYWELL. THIS DRAWING IS NOT TO BE COPIED OR USED WITHOUT THE APPROVAL OF MICRO SWITCH

THIRD ANGLE PROJECTION

SCALE 2 TO 1

DO NOT SCALE PRINT

**CHARACTERISTICS**

| | |
|---|---|
| OPERATING FORCE | 15 OZ MAX |
| RELEASE FORCE | 3 OZ MIN |
| DIFFERENTIAL TRAVEL | .045 APPROX |
| OVERTRAVEL | .375 MIN |
| PLUNGER FORCE (AT .120 OVERTRAVEL) | 21 OZ MAX |

**ELECTRICAL DATA**

CONTACT ARRANGEMENT
S P D T

L213
10A 1/2HP 125, 250, OR 277 VAC
2A 480 VAC

**UNLESS OTHERWISE SPECIFIED TOLERANCES ARE**

| | | |
|---|---|---|
| ONE PLACE | (.0) | ±.030 |
| TWO PLACE | (.00) | ±.015 |
| THREE PLACE | (.000) | ±.005 |
| ANGLES | | ± 5° |

WEIGHT

NOTES
1 – GRAY PLASTIC CASE AND PLUNGER
2 FLAG STYLE QUICK CONNECT RECEPTACLE REQUIRED FOR NORMALLY OPEN TERMINAL IF SWITCH IS WIRED BEFORE MOUNTING
3 NOMINAL CUTOUT DIMENSION FOR PANELS BETWEEN .045 AND .100 SHOULD BE INTERPOLATED BETWEEN 1.115 AND 1.125
4 PUSH TO OPERATE – MOMENTARY

ANSI Y14.5M–1982 APPLIES

CATALOG LISTING 1DM176
ISSUE 3
REVISIONS
A CO-72328 WJC 14 NOV 92
B CO-78187 K D R 6 SEP 94
REPLACES X92486-DM
RELEASE NO. PR-18243
CHECK
CHECK D C S 19 MAR 93
CHECK
DRAWN WJC 14 NOV 92
DDM/CAD