THIS DRAWING IS UNPUBLISHED. RELEASED FOR PUBLICATION -,- .
© COPYRIGHT - By - ALL RIGHTS RESERVED.

LOC	DIST
AF	50

REVISIONS

P	LTR	DESCRIPTION	DATE	DWN	APVD
	S1	REVISED PER ECR-14-007779	28MAY2014	GRZ	JL

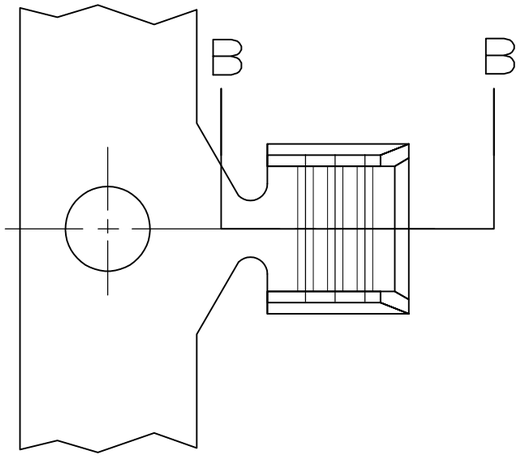

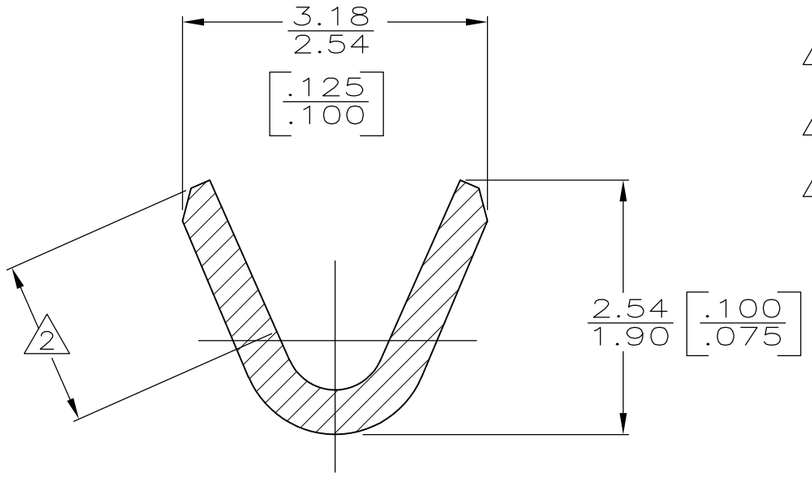

SECTION A-A
SCALE 20:1

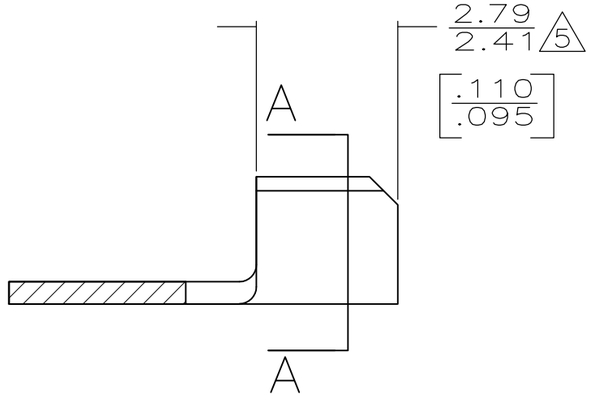

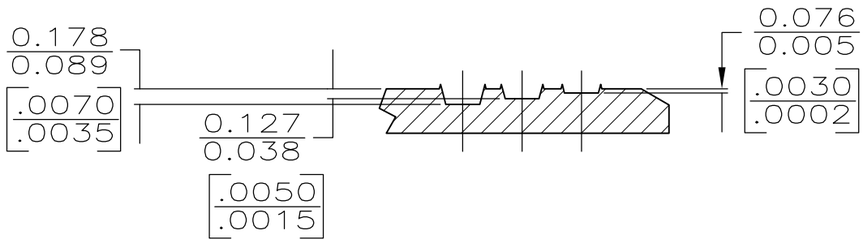

SECTION B-B
SCALE 20:1

1 CONTINUOUS STRIP ON REEL.

2 SERRATION DEPTH SHOULD BE MEASURED IN AN AREA FREE FROM FORMING.

3 0.00254 [.000100] MIN TIN PLATE.

4 0.0038[.000015] MIN GOLD PLATE OVER 0.00127[.000050] MIN NICKEL UNDERPLATE.

5 GOLD PLATE IS ON WIRE BARREL ONLY.

6 REELING: PLASTIC REELS.

7 PREPRODUCTION - FASR REQUIRED.

8 CRIMP WIDTH 1.78 [.070], F (AMPLIVAR TYPE)
CRIMP HEIGHT ±0.05 [.002] =
(TOTAL CMA + 5,000) / 129,000
GENERAL APPLICATION GUIDELINES MUST BE FOLLOWED AS SPECIFIED IN CATALOG #82221
FOR APPLICATOR INFO CALL, 1-800-722-1111
FOR PRODUCT INFO CALL, 1-800-522-6752

	FINISH	REELING	WIRE RANGE	PART NO
	3	REVERSE	400-1300 CMA	7 62194-6
	TIN PLATE	STANDARD 6		62194-5
	5 4	STANDARD		62194-4
OBSOLETE	3	REVERSE		~~62194-3~~
	TIN PLATE	STANDARD		62194-2
OBSOLETE				~~62194-1~~

THIS DRAWING IS A CONTROLLED DOCUMENT.

DIMENSIONS: INCHES

TOLERANCES UNLESS OTHERWISE SPECIFIED:
0 PLC ± -
1 PLC ± -
2 PLC ± 0.25 [.010]
3 PLC ± -
4 PLC ± -
ANGLES ± -

MATERIAL: BRASS
FINISH: SEE TABLE

DWN PHIL FORTNEY 7/27/93
CHK MS FEHER 7/27/93
APVD D SCHWENK 7/27/93
PRODUCT SPEC —
APPLICATION SPEC —
WEIGHT —

TE Connectivity

NAME: SPLICE, AMPLIVAR,™ MINIATURE —

SIZE	CAGE CODE	DRAWING NO	RESTRICTED TO
A3	00779	C-62194	—

CUSTOMER DRAWING | SCALE 10:1 | SHEET 1 OF 1 | REV S1

1470-19 (3/11)