THIS DRAWING IS UNPUBLISHED. RELEASED FOR PUBLICATION -,- .
© COPYRIGHT - By - ALL RIGHTS RESERVED.

LOC	DIST
H	—

REVISIONS

P	LTR	DESCRIPTION	DATE	DWN	APVD
	A	INITIAL RELEASE	26NOV2013	GSK	BvH
	A1	ECR-14-011671	20AUG2014	GSK	BvH

NOTES:
Tolerances cable lengths:

0m to 0.5m	+30mm
0.5m to 1.0m	+50mm
1.0m to 3.0m	+100mm
< 3.0m	+1.5%

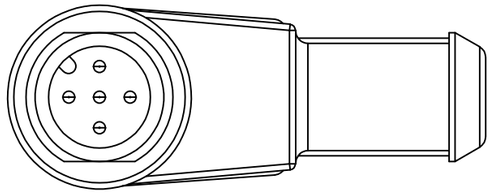

VIEW 'A'

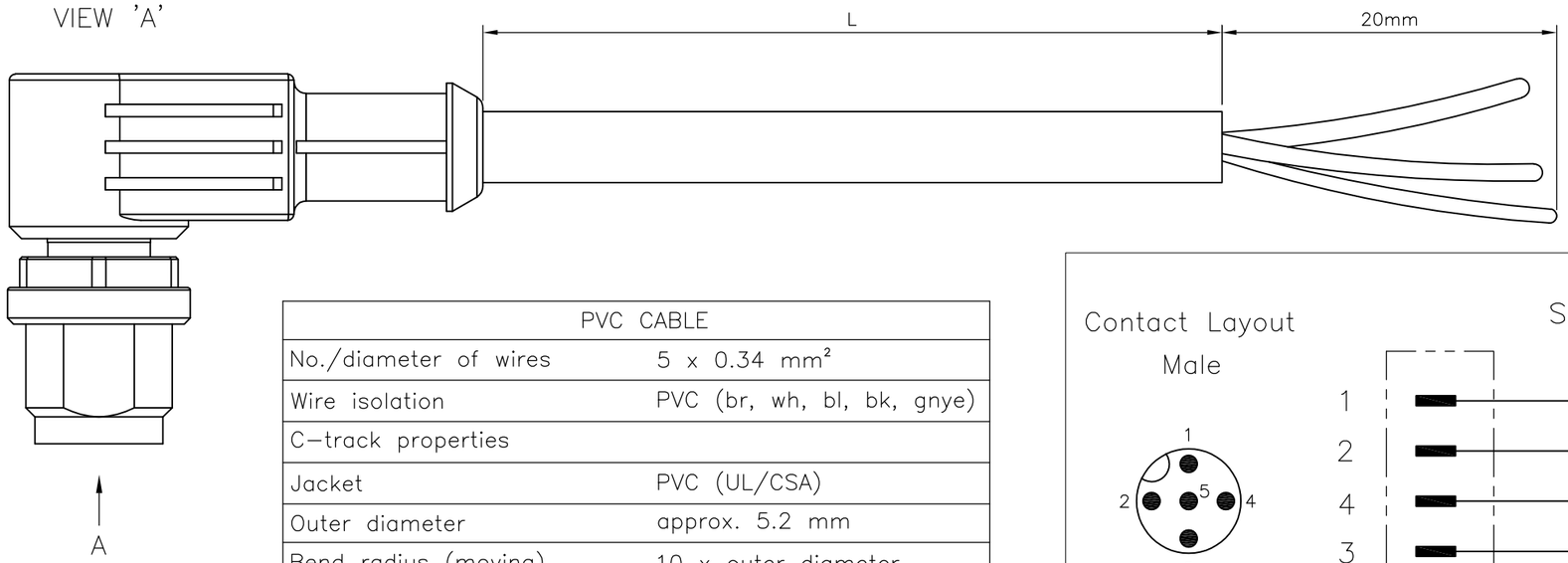

PVC CABLE	
No./diameter of wires	5 x 0.34 mm²
Wire isolation	PVC (br, wh, bl, bk, gnye)
C-track properties	
Jacket	PVC (UL/CSA)
Outer diameter	approx. 5.2 mm
Bend radius (moving)	10 x outer diameter
Temperature range (fixed)	-30...+80 °C
Temperature range (mobile)	-5...+80 °C

Contact Layout
Male

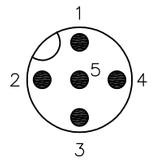

Schematic diagram

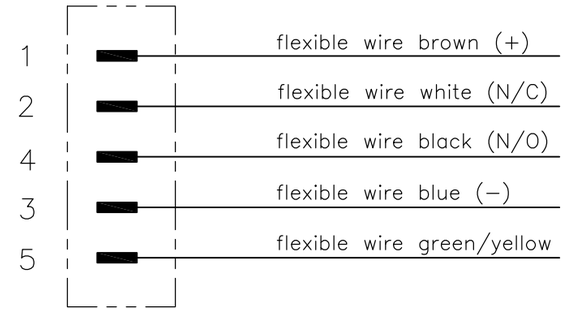

TECHNICAL DATA	
Operating voltage	max. 125 V AC/DC
Operating current per contact	max. 4 A
Locking of ports	Screw thread M12 x 1 mm (recommended torque 0.6 Nm) self-securing
Protection	IP65 and IP67 when plugged and screwed down (EN 60529)

PUR CABLE	
No./diameter of wires	5 x 0.34 mm²
Wire isolation	PP (br, wh, bl, bk, gnye)
C-track properties	yes
Jacket	PUR (UL/CSA)
Outer diameter	approx. 5.0 mm
Bend radius (moving)	10 x outer diameter
Temperature range (fixed)	-50...+80 °C
Temperature range (mobile)	-25...+80 °C

	LENGTH"L"	MATERIAL	JACKET COLOR	TE PN	DESCRIPTION	ITEM
5 pos	10mtr	PVC	Black	1-2273088-4	5x22AWG PVC 10.0m	8
	5mtr			1-2273088-3	5x22AWG PVC 5.0m	7
	3mtr			1-2273088-2	5x22AWG PVC 3.0m	6
	1.5mtr			1-2273088-1	5x22AWG PVC 1.5m	5
5 pos	10mtr	PUR	Black	2273088-4	5x22AWG PUR 10.0m	4
	5mtr			2273088-3	5x22AWG PUR 5.0m	3
	3mtr			2273088-2	5x22AWG PUR 3.0m	2
	1.5mtr			2273088-1	5x22AWG PUR 1.5m	1

THIS DRAWING IS A CONTROLLED DOCUMENT.

DIMENSIONS: mm

TOLERANCES UNLESS OTHERWISE SPECIFIED:
0 PLC ±-
1 PLC ±-
2 PLC ±-
3 PLC ±-
4 PLC ±-
ANGLES ±-

MATERIAL -
FINISH -

DWN SATHISH KUMAR.G 26NOV2013
CHK B.VELDHOVEN 26NOV2013
APVD A.VAN ZANDVOORT 26NOV2013
PRODUCT SPEC 108-19483
APPLICATION SPEC 114-32127
WEIGHT -

TE Connectivity

NAME M12 X 1.0 ANGLED PLUG PIGT A

SIZE	CAGE CODE	DRAWING NO	RESTRICTED TO
A3	00779	C-2273088	—

CUSTOMER DRAWING | SCALE NTS | SHEET 1 OF 1 | REV A1