DO NOT SCALE
DIMENSIONS IN mm

METRIC

THIRD ANGLE PROJECTION

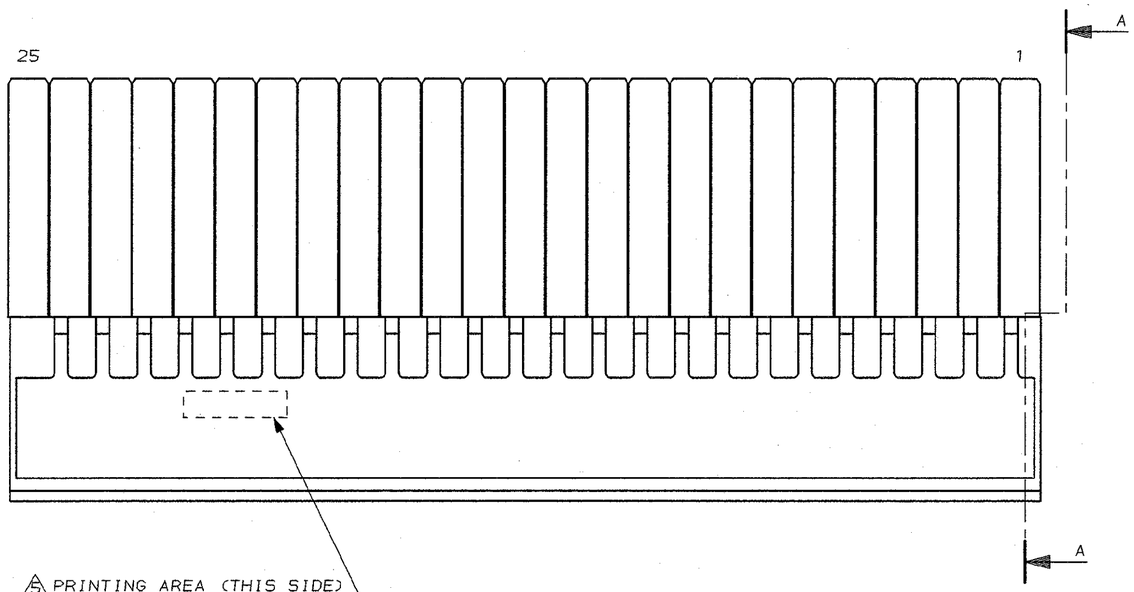

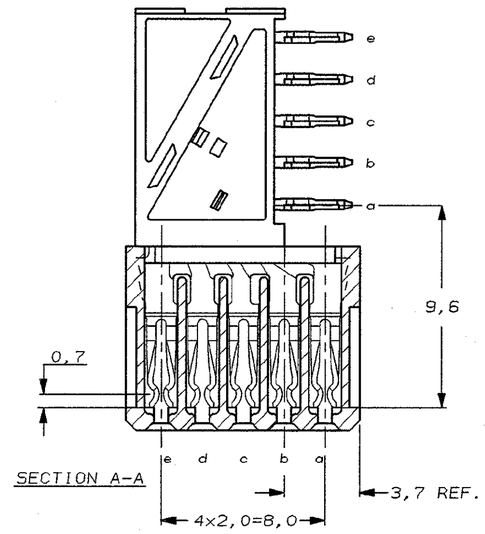

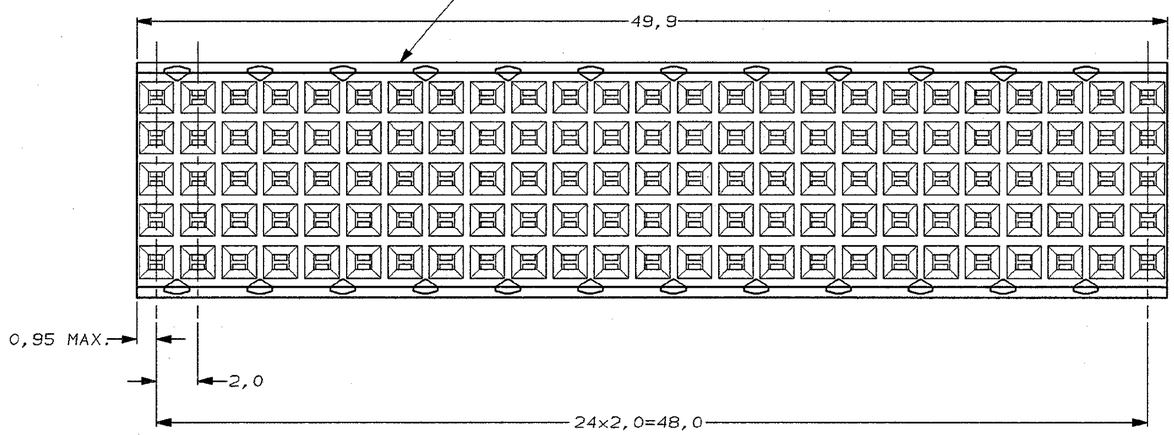

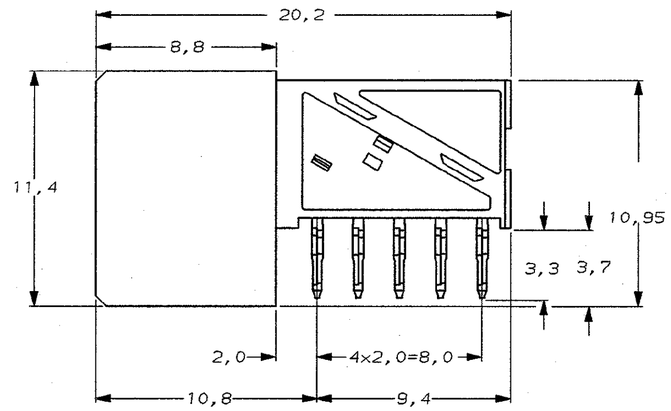

THIS DRAWING IS
PRELIMINARY

NOTES:

1. PLATING CONTACT AREA: 0,8µm Au MIN. OVER 1,3µm Ni MIN.
   ACTION PIN, 0,5µm SnPb MIN. OVER 1,3µm Ni MIN.
2. PLATING CONTACT AREA: 2,0µm Au MIN. OVER 1,3µm Ni MIN.
   ACTION PIN, 0,5µm SnPb MIN. OVER 1,3µm Ni MIN.
3. PLATING CONTACT AREA: 1,3µm Au MIN. OVER 1,3µm Ni MIN.
   ACTION PIN, 0,5µm SnPb MIN. OVER 1,3µm Ni MIN.
4. MATERIAL CONTACT; PHOSPHORBRONZE
   MATERIAL HOUSING; GLASSFILLED POLYESTER (GRAY)
   UL-RATING 94V0.
5. CONNECTOR PRINTED WITH PARTNUMBER AND DATECODE
6. PLATED-THROUGH HOLES AT 2x2mm SQUARE GRID. 125 HOLES
7. CONNECTOR LUBRICATED WITH BELLCORE
   APPROVED LUBRICANT. TECHNICAL REFERENCE:
   TR-NWT-001217 ISSUE 1, SEPT. 1992.
   CONNECTOR TESTED AND QUALIFIED AGAINST BELLCORE
   QUALITY LEVEL III, CENTRAL OFFICE APPLICATIONS.
8. FITS WITH INTEGRATED GROUND RETURN UPPERSHIELD, BASIC P.N. 338109
   AND INTEGRATED GROUND RETURN LOWERSHIELD, BASIC P.N. 338110

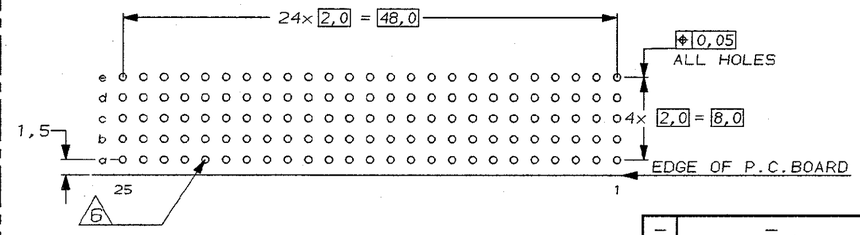

SCALE 2,5:1
COMPONENT SIDE AS SHOWN
RECOMMENDED PCB-HOLE LAY-OUT

P.C.B. HOLE DIM. ACTION PIN

DRILLED HOLE	0,7±0,025mm
FIN. HOLE	0,55 TO 0,65mm
Cu-thks	0,025 TO 0,050mm
SnPb-thks	0,004 TO 0,010mm

3 7	4	1-100145-9
1 7	4	100145-9
3	4	100145-4
2	4	100145-3
1	4	100145-1
FINISH	MATERIAL	PARTNUMBER

LTR.	REVISION RECORD	DR.	CHK.	DATE
–	–	–	–	–
–	–	–	–	–
–	–	–	–	–
–	–	–	–	–
–	–	–	–	–
H	EH-0436-97	LvdH	WvdH	6 MAY'97
G	EH-0816-96	DT	WvdH	20-01-97

DR.: D. TRUREN DATE: 20-01-97
CHK.: W vd HEIJDEN DATE: 20-01-97
APP.: B. HOOIJ DATE: 8/15/97

CUSTOMER DRAWING
FOR REFERENCE ONLY
WILL NOT BE UPDATED

© COPYRIGHT 1996 BY AMP-HOLLAND B.V.
ALL INTERNATIONAL RIGHTS RESERVED. AMP PRODUCTS MAY BE COVERED BY U.S. AND FOREIGN AND/OR PATENTS PENDING.

THIS DRAWING IS UNPUBLISHED
~~RELEASED FOR PUBLICATION ,19~~

AMP
AMP-HOLLAND B.V.
's-Hertogenbosch,
The Netherlands.

NAME
Z-PACK 2mm HM TYPE B
125 POS. FEMALE CONNECTOR

DWG.No. C-100145 | REV.LTR. H | SHEET 1 OF 1 | A2

R6-129 (REV.04-91)