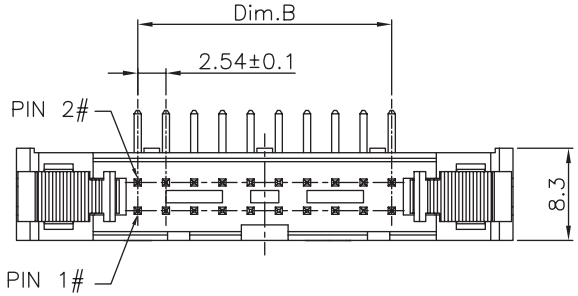

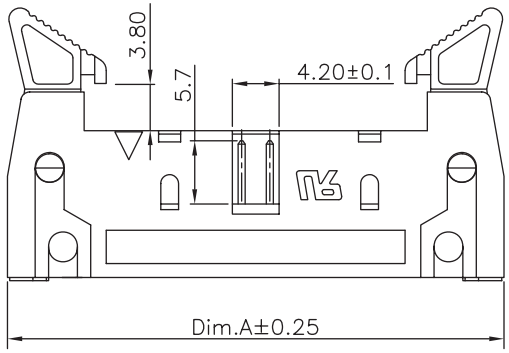

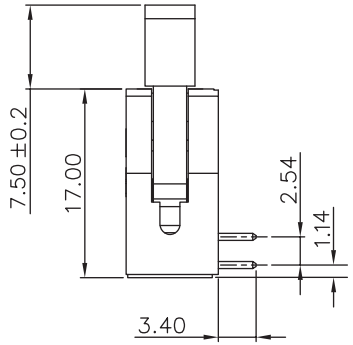

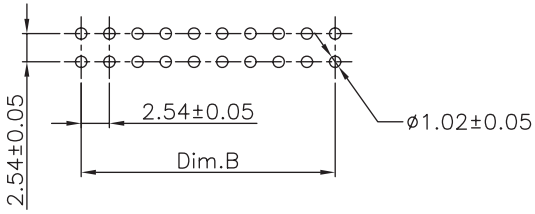

Recommended P.C.B Layout

TECHNICAL CHARACTERISTICS

MATERIAL
INSULATOR: PBT
FLAMABILITY RATING: UL94-V0
COLOR: BLACK
CONTACT MATERIAL: COPPER ALLOY
CONTACT TYPE: STAMPED
CONTACT PLATING: GOLD
QUALITY CLASS: 3 AS PER CECC 75 301-802
PITCH: 2.54MM

ENVIRONMENTAL
OPERATING TEMPERATURE: -40 UP TO 125°C
COMPLIANCE: LEAD FREE AND ROHS

ELECTRICAL
CURRENT RATING: 3A MAX
WORKING VOLTAGE: 250V AC
INSULATOR RESISTANCE: >1000 MOHM
DIELECTRIC WITHSTANDING VOLTAGE: 500V AC/MN
CONTACT RESISTANCE: 20 mOHM MAX

STANDARD
CERTIFIED: E323964 / MODEL NUMBER 612-212-R

SOLDERING
WAVE PROCESS ONLY

PACKAGING
TRAY

DIMENSION

No. of Positions	Dim A	Dim B	No. of Positions	Dim A	Dim B
10	32.00	10.16	40	70.10	48.26
14	37.08	15.24	50	82.85	60.96
16	39.62	17.78	60	95.50	73.66
20	44.70	22.86			
24	49.78	27.94			
26	52.30	30.48			
30	57.40	35.56			
34	62.50	40.64			

Notes:
No. of Positions 64 with three key; Other positions with one key

RoHS Compliant

REV	DATE	FILE	BY
J	24-SEP-13	TABLE PINNING	QL
I	19-MAR-13	NOTES	AR
H	20-FEB-13	OVERALL LENGHT	QL

PROJECTION:

GENERAL TOLERANCE
.X = +/_ 0.2
.XX = +/_ 0.15

WÜRTH ELEKTRONIK

APPROVAL: RJ

UNIT: MM
SCALE:
SHEET: 1/2
DRAW: MIKE

DESCRIPTION: 2.54MM MALE ANGLED BOX HEADER WITH SHORT LEVER

WERI PART NO: 612 0xx 221 21

SIZE A4

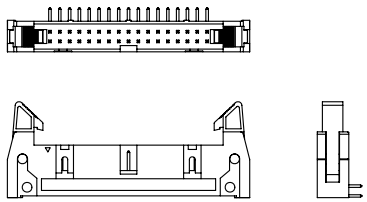

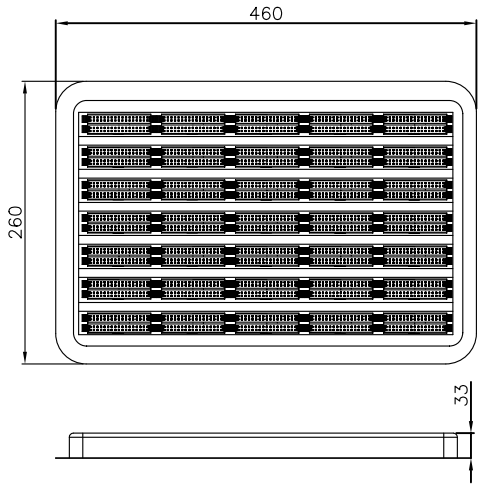

Note:
1.Dimension:
Tray Size:460(L)x260(W)x33(H) (mm)
Catron Size:470(L)x270(W)x350(H) (mm)
2.Quantity:

Circuits	Pcs/Tary	Tarys/Carton	Q'TY
06	210	11	2310
08	196	11	2156
10	182	11	2002
14	154	11	1694
16	140	11	1540
20	126	11	1386
24–26	112	11	1232
30	98	11	1078
34–40	84	11	924
50	70	11	770
60–64	56	11	616

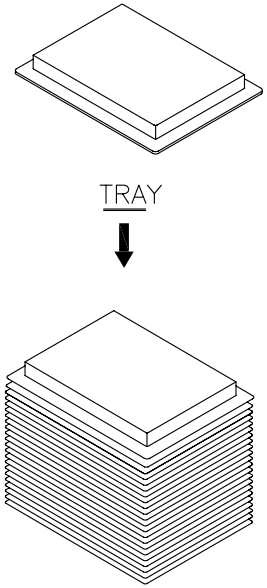

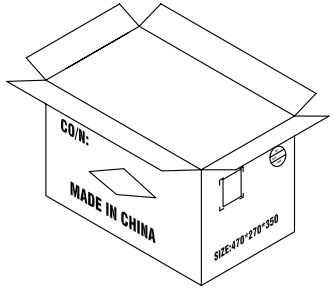

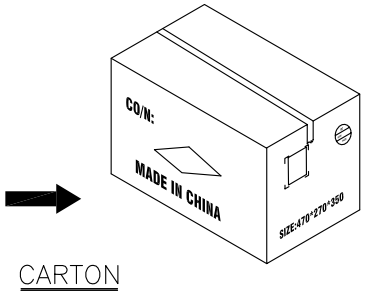

RoHS Compliant

REV	DATE	FILE	BY
G			
F			
E			
D			
C			
B			
A			

PROJECTION:

GENERAL TOLERANCE
.X = +/_ 0.2
.XX = +/_ 0.15

WÜRTH ELEKTRONIK

APPROVAL: RJ

UNIT: MM
SCALE:
SHEET: 2/2
DRAW: PEARL

DESCRIPTION: 2.54MM MALE ANGLED BOX HEADER WITH SHORT LEVER

WERI PART NO: 612 0xx 221 21

SIZE
A4

Mouser Electronics

Authorized Distributor

Click to View Pricing, Inventory, Delivery & Lifecycle Information:

Wurth Electronics:

61202022121 61201022121 61201622121 61202622121