ITEM NO.	PART NUMBER	DESCRIPTION	QTY.	NOTES
1	TLY-1P	NEMA 1-15P	1	black overmold
2	TLY-53	C7, polarized	1	black overmold
3	30-00246	Wire, 2C, 18 AWG, UL SPT-2, 300V, 105C, 7.05 mm, VW-1, PVC	1	

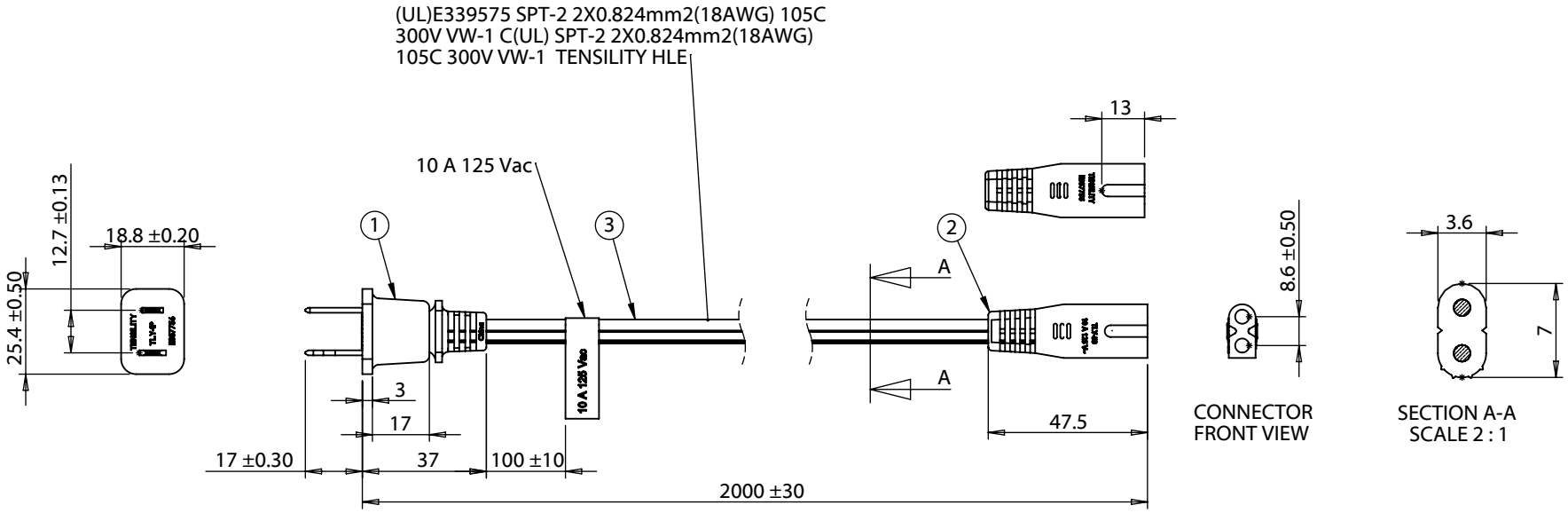

REVISION	DATE	DESCRIPTION
A	2/5/2013	Initial release

NOTES

Rated for 10 A at 125 Vac

RoHS, REACH and Dodd-Frank conflict materials compliant

Function test: no open, no reversed polarity, no short circuit, no INT

TENSILITY

20802 Sockeye Place #130
Bend, OR 97701 USA
tel 541.323.3228 *fax* 541.323.4202
800 877.670.7118 www.tensility.com

DIMENSIONS ARE IN MILLIMETERS

TOLERANCES:
X: ± 0.5 mm
X.X: ± 0.3 mm
X.XX: ± 0.05 mm

DESCRIPTION:
Ac cord, 2000 mm, U.S, NEMA 1-15P plug, TLY-1P to C7, TLY-53, 18 AWG, SPT-2 wire, 30-00246

SIZE	PART NUMBER	
A	11-00012	
SCALE: 1:2	WEIGHT:	SHEET 1 OF 1

5 4 3 2 1