PART NUMBER	FIRST USED	AWG	INS RANGE MAX.	INS RANGE MIN.	COLOR CODE
69411	69525-1 69526-2	24	.065	.046	RED
69411-4	69525-1 69526-2	22	.065	.046	ORANGE
69411-7	69525-1 69526-2	22	.065	.046	ORANGE
1-69411-0	69525-1 69526-2	24	.065	.046	RED
1-69411-1	69525-1 69526-2	26	.065	.046	BROWN
1-69411-2	69525-1 69526-2	24	.065	.046	RED
1-69411-3	69525-1 69526-2	24	.065	.046	RED
1-69411-4	69525-1 69526-2	22	.065	.046	ORANGE
1-69411-5	69525-1 69526-2	24	.065	.046	RED
1-69411-6	69525-1 69526-2	22	.065	.046	ORANGE
1-69411-8	69525-1 69526-2	24	.065	.046	RED
1-69411-9	69525-1 69526-2	26	.065	.046	BROWN

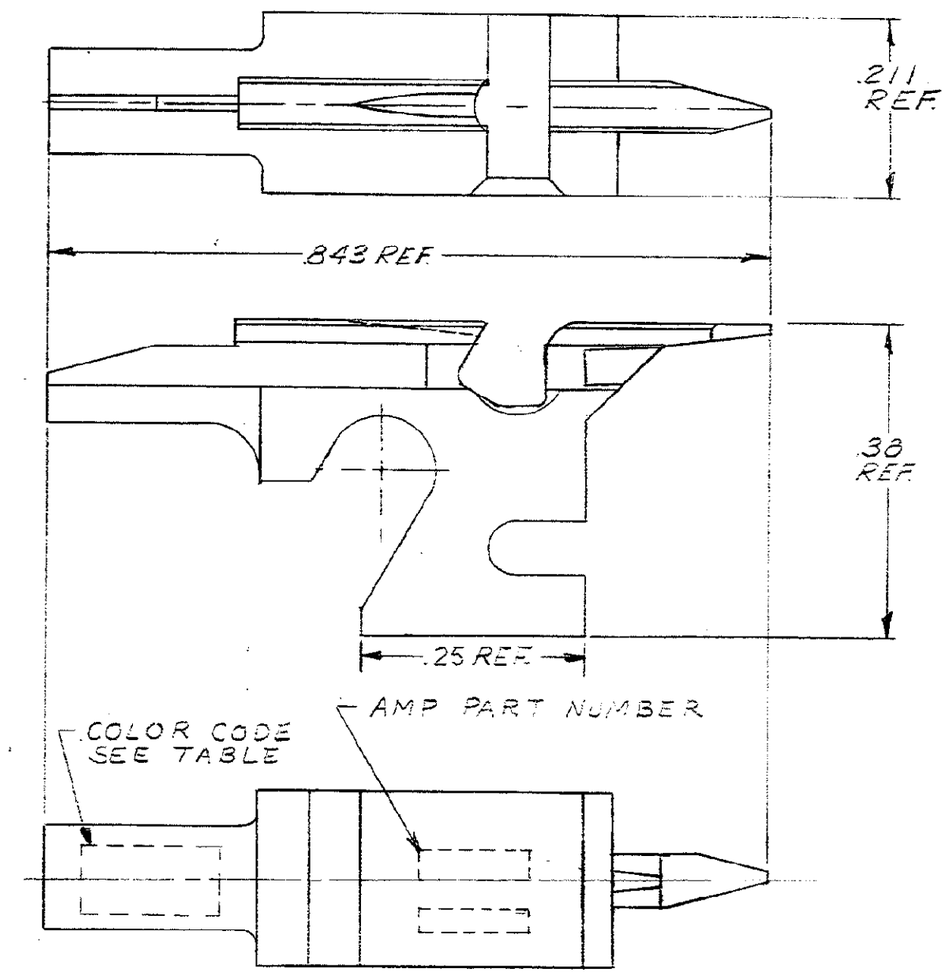

DIMENSIONS IN INCHES. DO NOT SCALE PRINT.

PRINT DIST 8

LTR	REVISION RECORD	DR	CHK	DATE
C	REVISED	B.S.		1-27-75
B	REVISED	FN		12-20-71
A	REVISED	PL		5-9-68

NUMBER 69411

REQUIRED PER ASSEMBLY

DESCRIPTION

DWG SIZE

UNPUBLISHED COPY NOT TO BE REPRODUCED NOR PUBLISHED WITHOUT WRITTEN PERMISSION OF AMP INCORPORATED
©1968 BY AMP INCORPORATED ALL RIGHTS RESERVED.
AMP PRODUCTS COVERED BY PATENTS AND/OR PATENTS PENDING.

REMARKS

ITEM NO

CUSTOMER COPY REFERENCE ONLY

DR B. Shenfeld 4-5-68

CHK E.J. Link 4-9-68

DE

REL E.J. Link 4-9-68

MATERIAL AND COATING: STEEL ELECTROLESS NICKEL

AMP INCORPORATED HARRISBURG, PENNA.

CLASS —+—+—

WIRE – RANGE – INSULATION: SEE TABLE | SEE TABLE

TYPE: TERMI-POINT

TOLERANCE EXCEPT AS NOTED ± .015 ± 1° 0'

SCALE AH

LOC M B

NO 69411

REV C

NAME: MANDREL

AMP 1253 REV 7/60 8