THIS DRAWING IS UNPUBLISHED. RELEASED FOR PUBLICATION -,- .
© COPYRIGHT - By - ALL RIGHTS RESERVED.

LOC	DIST
CM	53

REVISIONS

P	LTR	DESCRIPTION	DATE	DWN	APVD
	A1	ADD 3 NEW DASH NUMBER	07DEC2012	OL	SZ

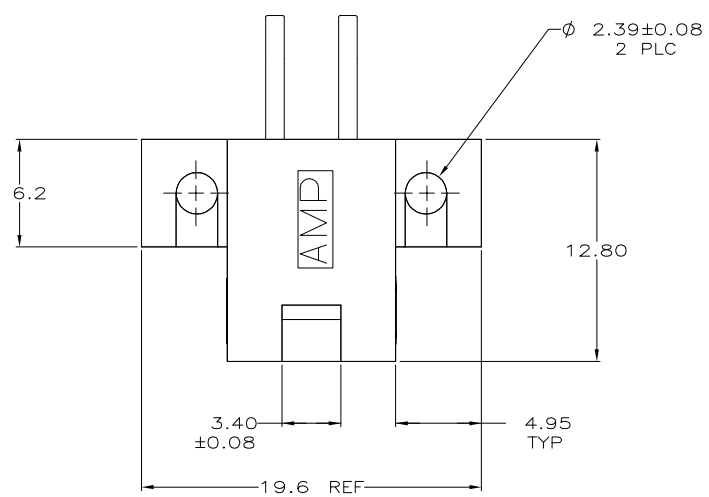

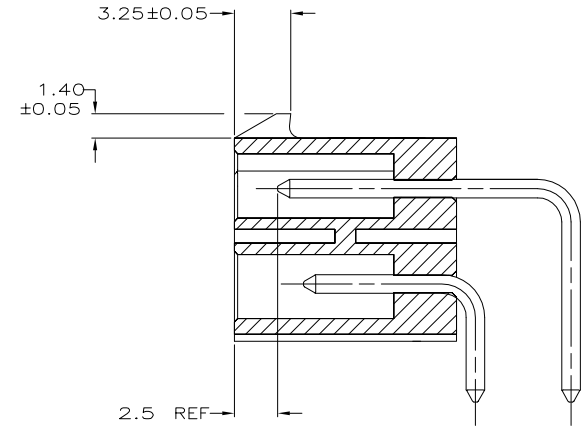

SECTION A–A

1. CONTACT: 0.00076 GOLD AT INTERFACE. 0.00254 MIN MATTE TIN ON SOLDER TAIL. 0.00127 MIN NICKEL UNDERPLATE ALL OVER.
2. MATES WITH AMP–DUAC/PL PLUG RECEPTACLE 794152 AND ITS CONTACTS.
3. CLEARANCE ENVELOPE FOR MATING PLUG RECEPTACLE LATCH.
5. ALL POSTS STANDARD.
6. CONTACT GROUND POST LOCATED IN CIRCUIT 3, ASSEMBLY P/N 5794172–3.
7. NO POST IN POSITION 1
8. NO POST IN POSITION 2
9. NO POST IN POSITION 4

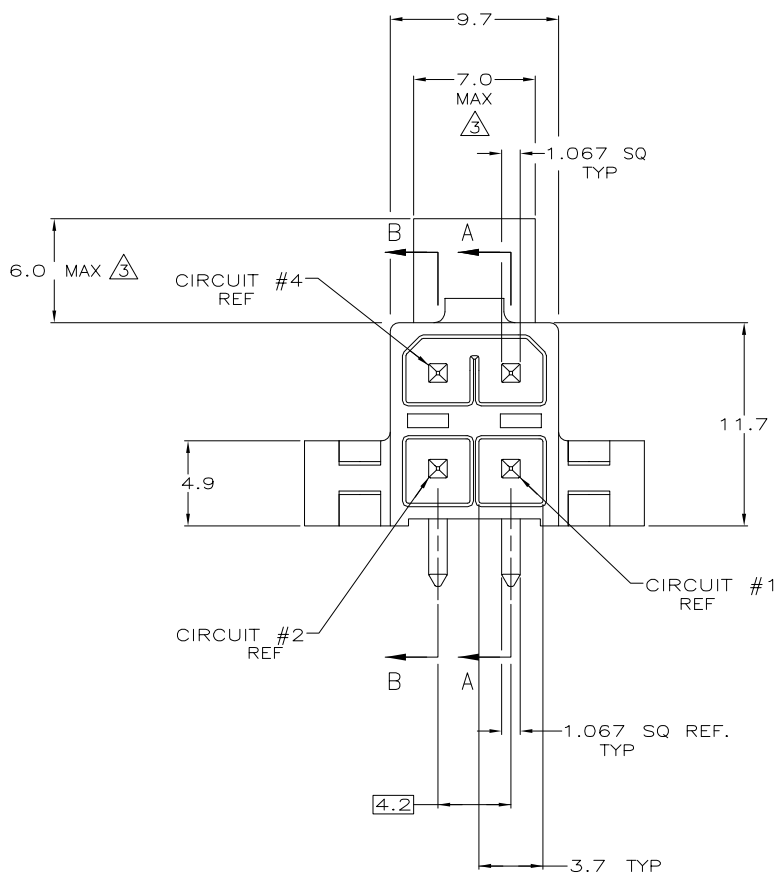

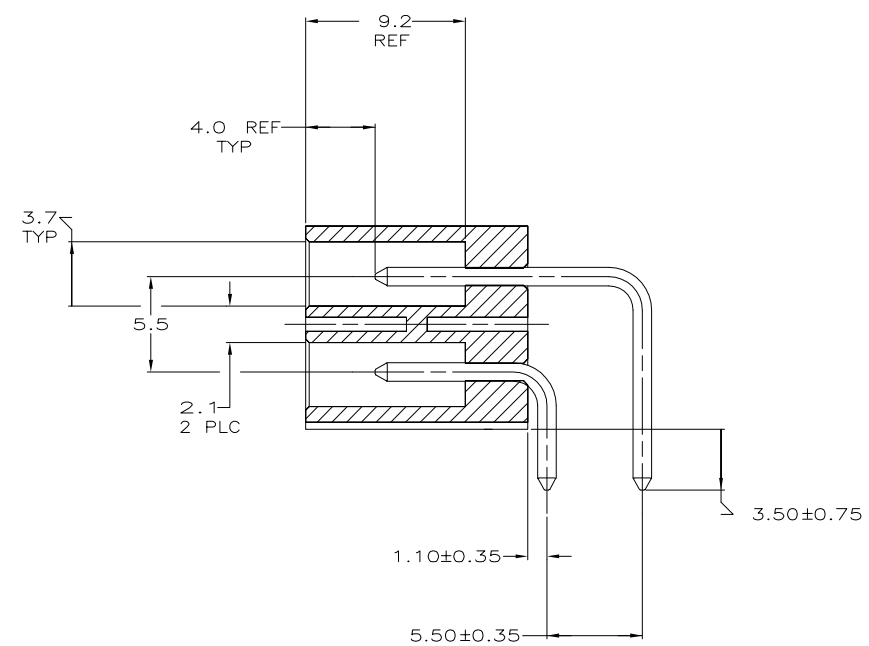

SECTION B–B

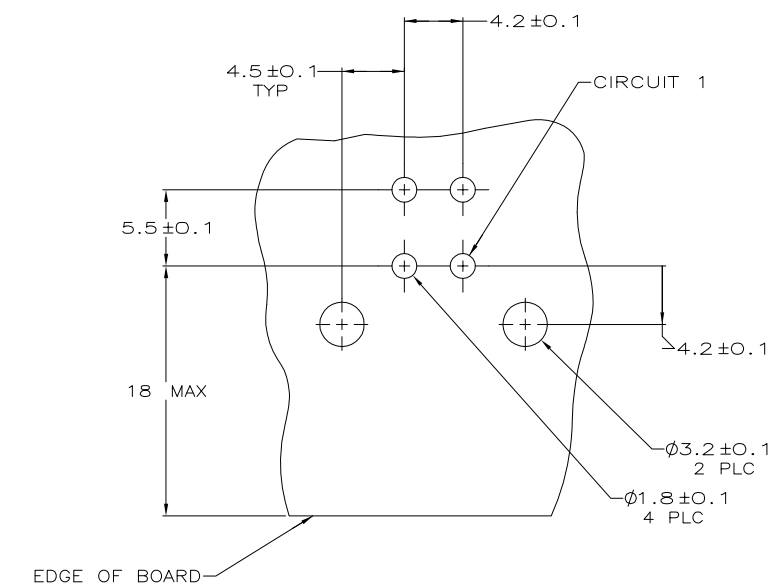

RECOMMENDED MOUNTING HOLE PATTERN
FOR 1.78 MAX THICK P.C. BOARD
COMPONENT SIDE SHOWN
SCALE 4:1

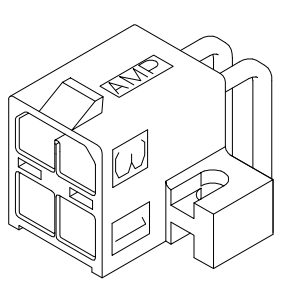

3–DIMENSIONAL MODEL
NTS

5794172–3 SHOWN

6	9	BRASS	1	PBT, UL94V–0	NATURAL(WHITE)	5794172–6
6	8	BRASS	1	PBT, UL94V–0	NATURAL(WHITE)	5794172–5
6	7	BRASS	1	PBT, UL94V–0	NATURAL(WHITE)	5794172–4
6		BRASS	1	PBT, UL94V–0	NATURAL(WHITE)	5794172–3
5		BRASS	1	PBT, UL94V–0	NATURAL(WHITE)	5794172–2
		MATERIAL	FINISH	MATERIAL	COLOR	PART NO
		PIN		HOUSING		

THIS DRAWING IS A CONTROLLED DOCUMENT.

DIMENSIONS: mm

TOLERANCES UNLESS OTHERWISE SPECIFIED:
0 PLC ± –
1 PLC ± 0.2
2 PLC ± 0.13
3 PLC ± –
4 PLC ± –
ANGLES ± 0° 30'

MATERIAL SEE TABLE
FINISH SEE TABLE

METRIC

DWN R.GRZYBOWSKI 04MAR05
CHK A.FRANTUM 04MAR05
APVD A.FRANTUM 04MAR05
PRODUCT SPEC 108–1646
APPLICATION SPEC 114–6067
WEIGHT –

TE Connectivity

NAME HEADER ASSEMBLY, RIGHT ANGLE, 4 CIRCUIT, AMPDUAC/PL POWER CONNECTOR

SIZE	CAGE CODE	DRAWING NO	RESTRICTED TO
A1	00779	C–5794172	–

CUSTOMER DRAWING SCALE 5:1 SHEET 1 OF 1 REV A1