THIS DRAWING IS UNPUBLISHED. RELEASED FOR PUBLICATION -
© COPYRIGHT 2008 BY TYCO ELECTRONICS CORPORATION. ALL RIGHTS RESERVED.

LOC	DIST
IS	-

REVISIONS

P	LTR	DESCRIPTION	DATE	DWN	APVD
	51	First issue	23MAY2008	AM	DB
	52	Update drawing	09JUN2008	AM	DB
	A	Released to production	15DEC2008	AM	DB

NOTE:
1) Without front metal plate.
2) Without common ground.
3) Impedance: 50Ω.
4) IEC-61169-8 Compliance.
5) IEC-60068-2-20 Compliance.
6) JECD22-B106D Compliance.
7) ROHS Compliance.
8) Return loss up to 2 GHz.
9) Switching function radial force: 15N Max.

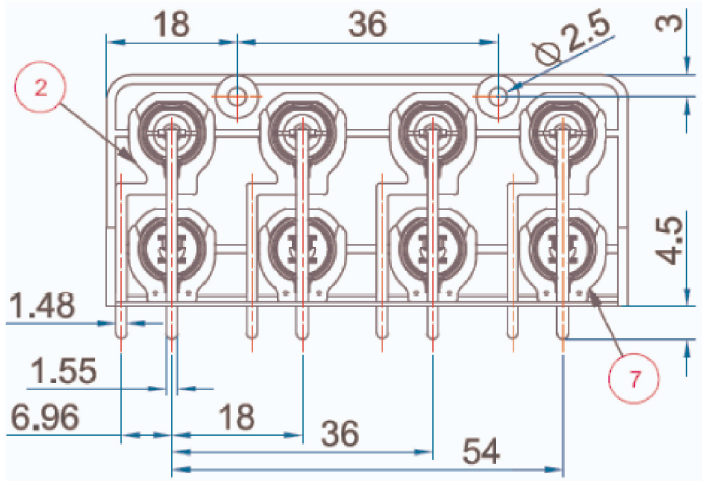

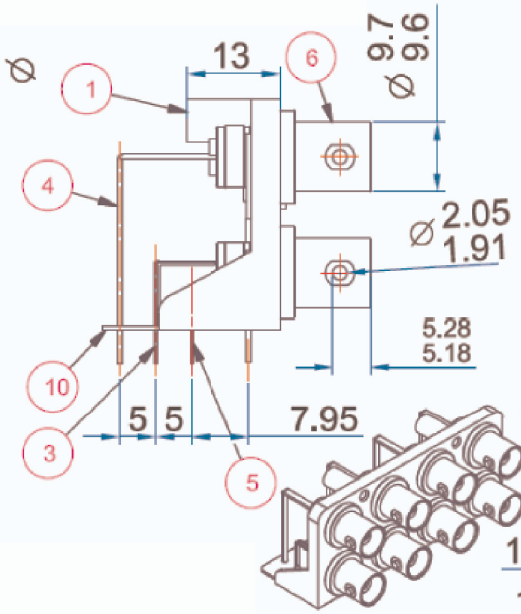

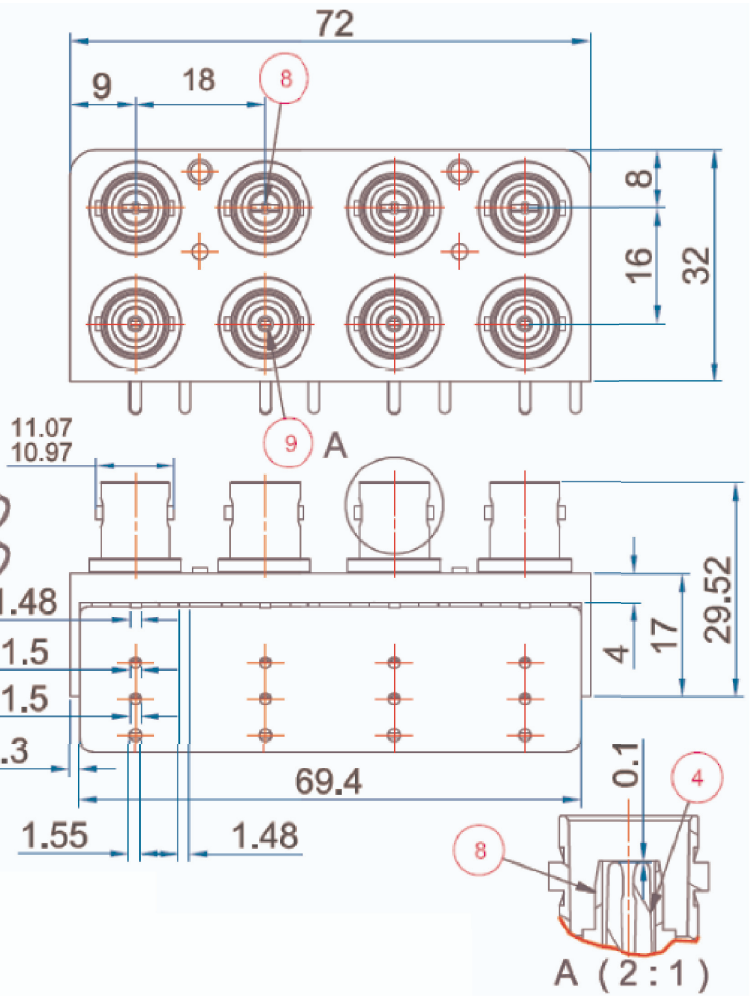

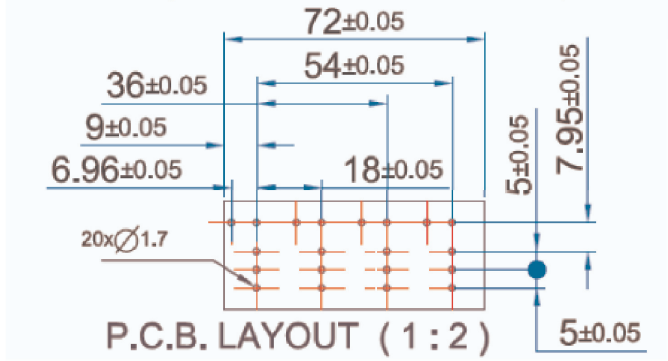

P.C.B. LAYOUT (1:2)

TE P/N	Item	Material	Finish	Description	Qty
619364-1	10	Bakelite	Black	Fixed Board	1
	9	POM	White	Insulator	4
	8	POM	White	Insulator	4
	7	Brass	1.8 µmSn over 2 µmNi	Pin Foot	4
	6	Zinc Alloy	0.5 µm Ni	Body	8
	5	BeCu	1.8 µmSn over 2 µmNi	Pin Foot	4
	4	Brass	1.8 µmSn over 2 µmNi	Pin Foot	4
	3	BeCu	1.8 µmSn over 2 µmNi	Pin Foot	4
	2	Brass	1.8 µmSn over 2 µmNi	Pin Foot	4
	1	ABS	Black	Bracket	1

THIS DRAWING IS A CONTROLLED DOCUMENT FOR TYCO ELECTRONICS CORPORATION. IT IS SUBJECT TO CHANGE AND THE CONTROLLING ENGINEERING ORGANIZATION SHOULD BE CONTACTED FOR THE LATEST REVISION.

DIMENSIONS: mm

TOLERANCES UNLESS OTHERWISE SPECIFIED:
0 PLC ±0.3
1 PLC ±0.2
2 PLC ±0.1
3 PLC ±-
4 PLC ±-
ANGLES ±-

MATERIAL see table
FINISH see table

DWN A.Mariotti 23MAY2008
CHK D.Bozzer 23MAY2008
APVD -
PRODUCT SPEC -
APPLICATION SPEC -
WEIGHT -

Tyco Electronics
Tyco Electronics
CH - Switzerland - Lugano

NAME
8 (4x2) Position R/A BNC PCN Jack
Lower row with switch,
upper row none switched.

SIZE	CAGE CODE	DRAWING NO	RESTRICTED TO
A3	00779	C-619364	-

CUSTOMER DRAWING | SCALE - | SHEET 1 OF 1 | REV A

AMP 1470-19 REV 31MAR2000