CAD GENERATED DRAWING - NO PENCIL CHANGES ALLOWED

CATALOG No.	AMP (NOTE 1)	VOLTS
0252.062	1/16	125
0252.125	1/8	125
0255.250	1/4	125
0252.375	3/8	125
0252.500	1/2	125
0252.750	3/4	125
0252001	1	125
025201.5	1 1/2	125
0252002	2	125
025202.5	2 1/2	125
0252003	3	125
025203.5	3 1/2	125
0252004	4	125
0252005	5	125
0252007	7	125
0252010	10	125
0252012	12	32
0252015	15	32

ELECTRICAL CHARACTERISTICS

% OF AMPERAGE RATING	CLEARING TIME 7A & LOWER	CLEARING TIME 10A	CLEARING TIME 12A & HIGHER
100%	4 HRS. MIN.	4 HRS. MIN.	4 HRS. MIN.
200%	1 SEC. MAX.	3 SEC. MAX.	10 SEC. MAX.

NOTES:

1. UL RECOGNIZED THRU 15A & CSA CERTIFIED.
   INTERRUPTING CAPACITY TO 300A DC AT 125V,
   50A AC AT 125V
2. MATERIALS:
   BODY - GLASS
   COATING - INSULATING EPOXY
   LEADS - SOLDER COATED COPPER
3. TO BE STAMPED WITH L/F & AMPERAGE
   ON 2 OPPOSITE SIDES.

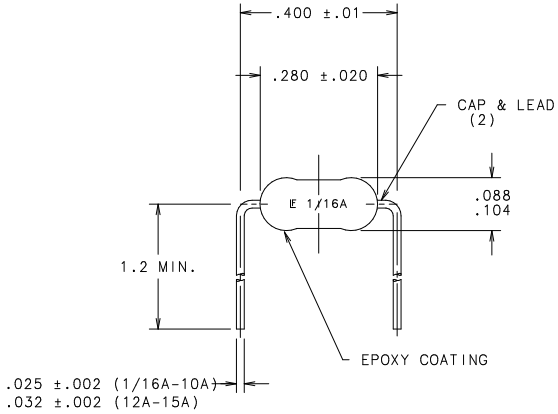

NO	COMPONENT NO	DESCRIPTION	QTY/M	U/M

BILL OF MATERIAL

MATL SPEC SEE NOTE 2 FINISH

DRW BJJ	DATE 6/11/96	SCALE 2:1	
CHK	DATE	SUPER DRW	
APPD	DATE	RAW STK WT	LBS/M

TOLERANCE UNLESS OTHERWISE SPECIFIED
TWO PLACE DEC ±.01 FRACTION ±
THREE PLACE DEC ±.005 ANGULAR ±1°

TITLE PICO II

COPIES TO
1 9 18
2 10 19
3 12 20
4 13 21
5 14 23
6 15 33
7 16 43
8 17 53

OUTLINE

Littelfuse® DES PLAINES, ILLINOIS 60016

REVISION N DRWG. NO. 0252000

LTR	REVISION	CHK	APD
N	37485D - REVISE & REDRAWN 6/11/96 BJJ		

CP DENOTES CP DIMENSIONS.-MINIMUM CP VALUE_____ MUST BE WITHIN THE DIMENSIONAL LIMITATIONS SHOWN ON DRAWING, AND PHYSICALLY LOCATED TO ALLOW FOR MAXIMUM TOOL LIFE.

SPC DENOTES A CHARACTERISTIC THAT PROVIDES AN INDICATION OF PROCESS PERFORMANCE. PROCEDURE FOR MEASUREMENT AND DATA TO BE DEFINED IN LITTELFUSE INSPECTION INSTRUCTIONS.

UNLESS OTHERWISE SPECIFIED-DIMENSIONS DO NOT INCLUDE PLATING.

◊ DENOTES CPK DIMENSIONS.-MINIMUM CPK VALUE_____

UNCONTROLLED DOCUMENT