THIS DRAWING IS UNPUBLISHED. RELEASED FOR PUBLICATION 2006
© COPYRIGHT 2006 BY TYCO ELECTRONICS CORPORATION. ALL RIGHTS RESERVED.

| LOC | DIST |
|---|---|
| A1 | - |

REVISIONS

| P | LTR | DESCRIPTION | DATE | DWN | APVD |
|---|---|---|---|---|---|
| | A2 | new Pro/E drawing ECR-07-019263 | 13AUG2007 | SR | ST |

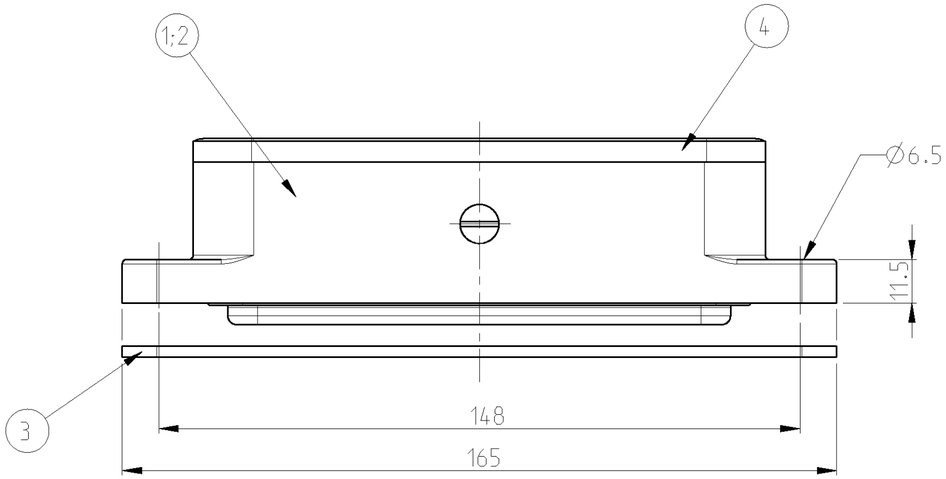


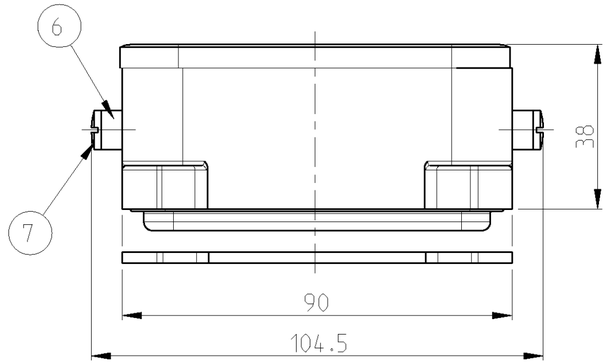


NOTES

1 PART SHALL BE FREE AND CLEAN OF BURRS AND OTHER FOREIGN MATERIAL

2 PACKAGING: QUANTITY 3 PIECES

3 VARNISHING INSIDE HOUSING NOT REQUIRED

PANEL CUT-OUT

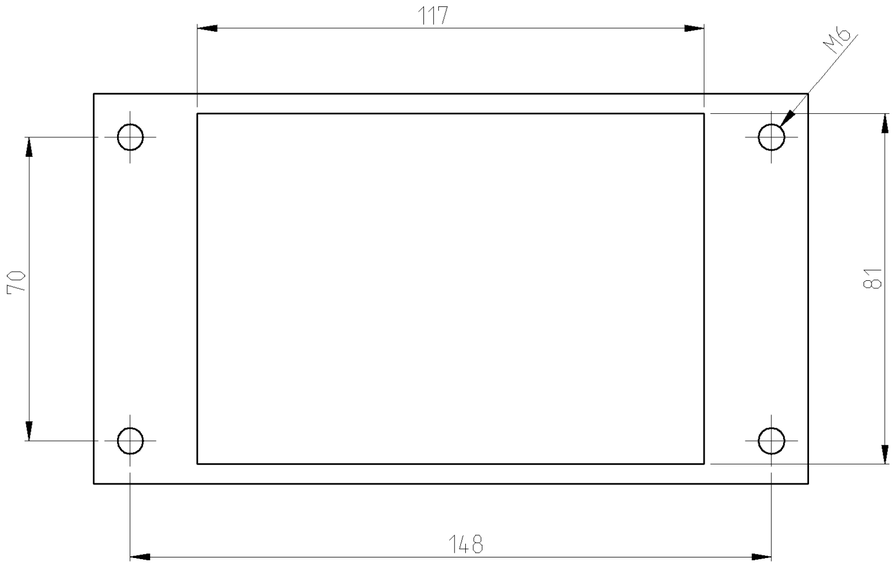


| 2-8 | 1-8 | DESCRIPTION | MATERIAL | SURFACE | COLOR | ITEM |
|---|---|---|---|---|---|---|
| 2 | - | SLIDE SPOOL | V2A | BLANK | - | 8 |
| - | 2 | SLIDE SPOOL | STEEL | ZINK PLATED | BLUE | 7 |
| 2 | - | SIDE CLIP | V2A | BLANK | - | 6 |
| - | 2 | SIDE CLIP | STEEL | ZINK PLATED | BLUE | 5 |
| 1 | 1 | FLANGED SEAL | NEOPRENE | - | BLACK | 4 |
| 1 | 1 | PROFIL SEAL | NEOPRENE | - | BLACK | 3 |
| 1 | - | SUR. MOUNT. HOUS. BOTTOM ENTRY | ALUMINIUM/ALU | ALUMINIUM OXID | BLACK | 2 |
| - | 1 | SUR. MOUNT. HOUS. BOTTOM ENTRY | ALUMINIUM/ALU | - | GREY | 1 |

HB-Z.48.AG-ZWGR

HB-K/Z.48.AG-ZWGR

THIS DRAWING IS A CONTROLLED DOCUMENT FOR TYCO ELECTRONICS CORPORATION IT IS SUBJECT TO CHANGE AND THE CONTROLLING ENGINEERING ORGANIZATION SHOULD BE CONTACTED FOR THE LATEST REVISION.

DIMENSIONS: mm

TOLERANCES UNLESS OTHERWISE SPECIFIED:
0 PLC ±-
1 PLC ±-
2 PLC ±-
3 PLC ±-
4 PLC ±-
ANGLES ±1°

MATERIAL -

FINISH -

DWN R.SCHNEIDER 13AUG2007
CHK SCHNURPFEIL 13AUG2007
APVD -
PRODUCT SPEC -
APPLICATION SPEC -
WEIGHT -

tyco Electronics
tyco Electronics AMP GmbH
53819 Neunkirchen (Germany)

NAME SURFACE MOUNTED HOUSING BOTTOM ENTRY
AG-ZVGR.HB.48

| SIZE | CAGE CODE | DRAWING NO | RESTRICTED TO |
|---|---|---|---|
| A2 | 00779 | © 1102237 | - |

CUSTOMER DRAWING | SCALE 5:1 | SHEET 1 OF 1 | REV A2

AMP 1471-9 REV 31MAR2000

Pro/ENGINEER DRAWING