REV.	DATE	DESCRIPTION
A	11/08/04	MODIFY RESISTOR TOLERANCE
B	10/31/05	REVISE PART DESCRIPTION
C	06/29/06	REVISE PLATING TO NEXCOTE

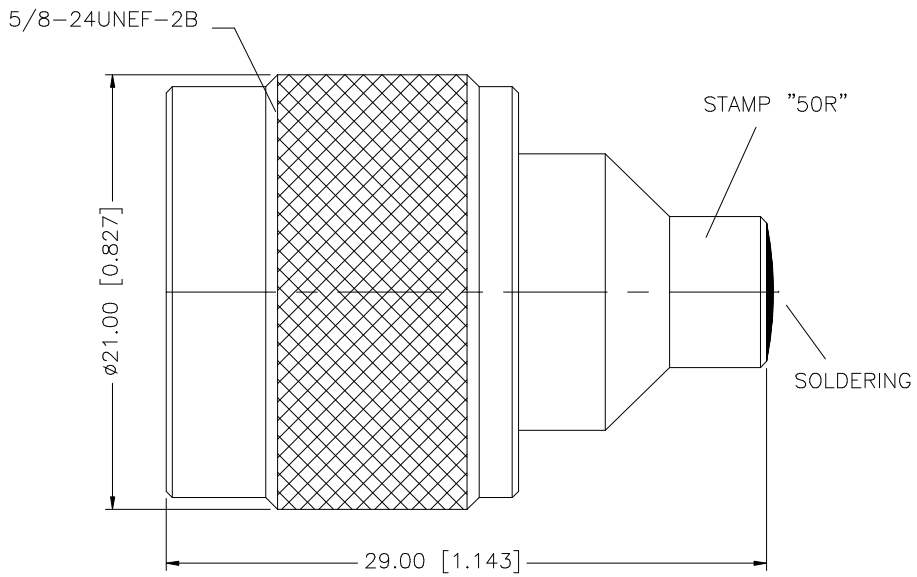

NOTE:

1) RESISTOR TOLERANCE
50ohm 1% 2 WATT

	DESCRIPTION	MATERIAL	FINISH	QTY
8				
7				
6				
5				
4				
3	CONTACT PIN	BRASS	GOLD	1
2	INSULATOR	TEFLON	NATURAL	1
1	BODY	BRASS	NEXCOTE	1

UNLESS OTHERWISE SPECIFIED DIMENSIONS ARE IN MILLIMETERS. DIMENSIONS IN [ ] ARE IN INCHES AND FOR CUSTOMER REFERANCE ONLY.

UNLESS OTHERWISE SPECIFIED TOLERANCES FOR MILLIMETERS ARE:
0.5 – 8mm ± 0.20mm
8 – 30mm ± 0.40mm
30 – 120mm ± 0.50mm

UNLESS OTHERWISE SPECIFIED TOLERANCES FOR INCHES ARE:
.020 – .315 = ± 0.007"
.315 – 1.180 = ± 0.015"
1.180 – 4.724 = ± 0.020"

DO NOT SCALE DRAWING

APPROVALS		DATE
DRAWN	G.R.S.	06/29/06
CHECKED		
ISSUED		
SHEET	1 OF 1	
CAD FILE	C:/202/202109–10.DWG	

Amphenol Connex

PART DESCRIPTION
N TERMINATOR PLUG – HIGH PERFORMANCE

PART NO. 202109–10

DWG. NO. 202109–10.DWG | REV. C | SIZE A | SCALE NA