PRODUCT NUMBER
54959-101
54959-101LF

DESCRIPTION	FINISH	
	54959-101	54959-101LF
CONTACT AREA	Au 0.8um MIN. UNDER Ni 1.27um MIN.	Au 0.8um MIN. UNDER Ni 1.27um MIN.
SPRING CLIP	Ni 1.27um MIN.	Ni 1.27um MIN.
BODY	Ni 1.27um MIN.	Ni 1.27um MIN.
INSERT CAP	Ni 1.27um MIN.	Ni 1.27um MIN.
P.F.PIN	SnPb 0.50-1.5um UNDER Ni 1.27um	Sn 0.50-1.5um UNDER Ni 1.27um
OTHERS	Au FLASH UNDER Ni 1.27um MIN.	Au FLASH UNDER Ni 1.27um MIN.

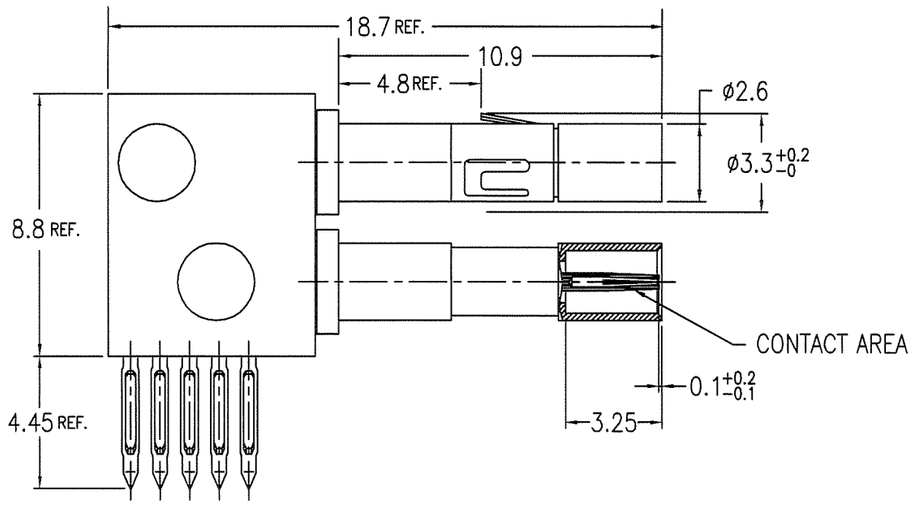

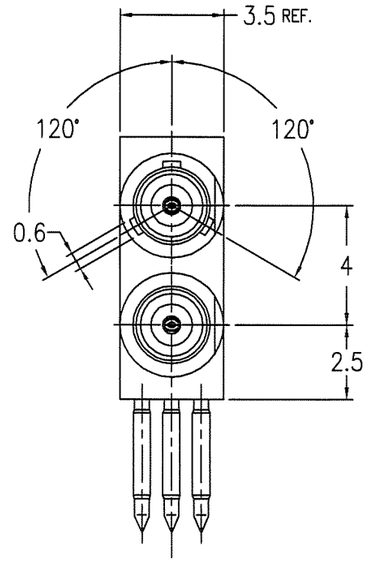

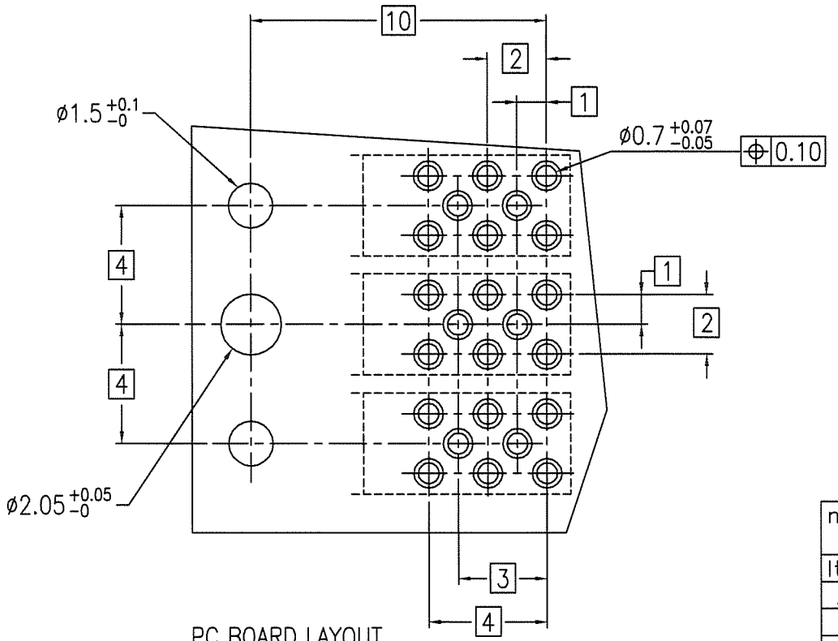

PC BOARD LAYOUT

NOTES

1. MATERIAL : CONTACT AREA BeCu
   SPRING CLIP BeCu
   INSULATOTR PTFE
   P.F. PIN CuSn
   OTHERS BRASS
2. FOR LEAD FREE P/N, THE PRODUCT MEET EUROPEAN UNION DIRECTIVES AND OTHER COUNTRY REGULATIONS AS DESCRIBED IN GS-22-008
3. THE HOUSING WILL WITHSTAND EXPOSURE TO 260℃ PEAK TEMPERATURE FOR 10 SECONDS IN A CONVECTION, INFRA-RED OR VAPOR PHASE REFLOW OVEN.

ltr	description	ecn no	dr	date
A	RELEASED	J10298	Y.K	4/26/'01
B	REVISED	J05-0663	T.S	10/21/'05
C	REVISED	J07-0030	S.0	1/18/'07

mat'l. code ---

surface ISO 1302 ✓ | tolerance ISO 406 ISO 1101 | projection | product family METRAL | CODE JP

tolerances unless otherwise specified: angles 0°±3°; linear 0.X ±0.3, 0.XX ±0.3, 0.XXX ±0.3

MM

scale 5:1

title: METRAL MINI COAX FEMALE R/A P.F. ASS'Y

dr	T.SUKEKAWA	10/21/'05
engr	S.OKUDAIRA	1/18/'07
chr	K. Shoji	1/18/07
appd	S. Okudaira	1/18/07

dwg no 54959 | sheet 1 of 1 | size A3

type Customer Drawing

sheet index	revision	C
	sheet	1

Rev. C

form: A3

PDM: Rev:C STATUS:Released Printed: Jun 07, 2010

FCIconnect.com
Copyright FCI.