REVISIONS		
ISS	ZONE	DESCRIPTION\PER REQUEST\DATE

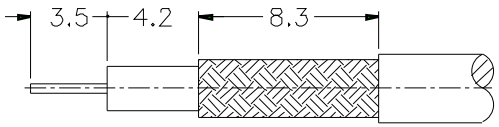

RECOMMENDED
CABLE STRIPPING DIM'S

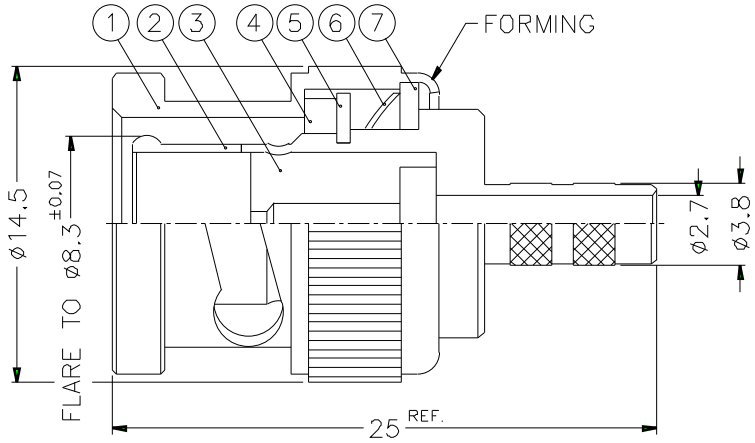

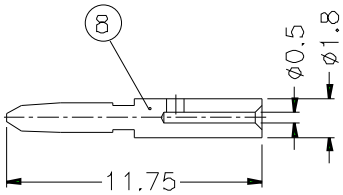

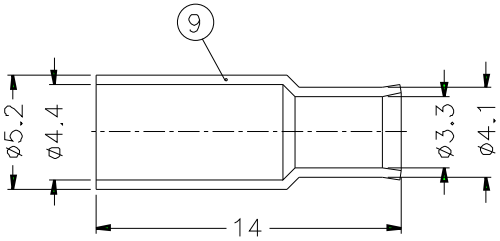

NOTES: FINISH (PLATING THICKNESS IN MICRO-INCHES)
1. BRASS PER QQ-B-626
2. BRASS PER QQ-B-613
3. NICKEL PL. 100 MIN. THICK OVER COPPER STRIKE
4. NICKEL PL. 200 MIN. THICK OVER COPPER STRIKE
5. GOLD PL. 3 MIN. THICK OVER NICKEL PL. 100 MIN. THICK OVER COPPER STRIKE
6. TEFLON MIL-P-19468
7. JIS H 3260, C 3501

1. CRIMPED FERRULE
HEX CRIMP SIZE .18"
2. CRIMPED CONTACT PIN
HEX CRIMP SIZE .055"/.06"

NO.	DESCRIPTION	MATERIAL	FINISH	Q'TY	DRAWING NO.
9	FERRULE	NOTE 7	NOTE 3	1	FR-52/44-41/33 X14
8	CONTACT PIN	NOTE 1	NOTE 5	1	B1121A9-003-8-18/05
7	WASHER	NOTE 2	NOTE 3	1	WS-128/9X08
6	SPRING	SK5	NOTE 4	1	B50000-6
5	RETAINER RING	NOTE 1	NOTE 3	1	B50000-5
4	GASKET	RUBBER	RED	1	GS-115/8X15
3	INSULATOR	NOTE 6	NATURAL	1	B1121A9-003-3T -75
2	BODY	NOTE 1	NOTE 3	1	B50000-2-38/27
1	SHELL	NOTE 1	NOTE 3	1	B50000-1-B

DIMENSIONS ARE IN MILLIMETERS

UNLESS OTHERWISE SPECIFIED TOLERANCES
0.5-6 = ±0.2
6-30 = ±0.4
30-120 = ±0.6
120-315 = ±1
315-1000 = ±1 6
1000-2000 = ±2 4

SCALE 3/1 ISSUE A

PART NO. B1121C4-NT3G-ST212-75

APPROVED DATE 10-11-01'

CHECKED DATE 10-11-01'

DRAWN DATE 10-11-01'

FILE NO.

Amphenol

TITLE
BNC CRIMP PLUG

DRAWING NO.

ITEM NO.