THIS DRAWING IS UNPUBLISHED. RELEASED FOR PUBLICATION 20
© COPYRIGHT 20 BY TYCO ELECTRONICS CORPORATION, ALL RIGHTS RESERVED.

LOC	DIST
ES	00

REVISIONS

P	LTR	DESCRIPTION	DATE	DWN	APVD
	B	REVISED ECR-06-000966	19JAN06	LZ	SY
	C	ECR-11-013206	27JUN2011	D.P	C.W

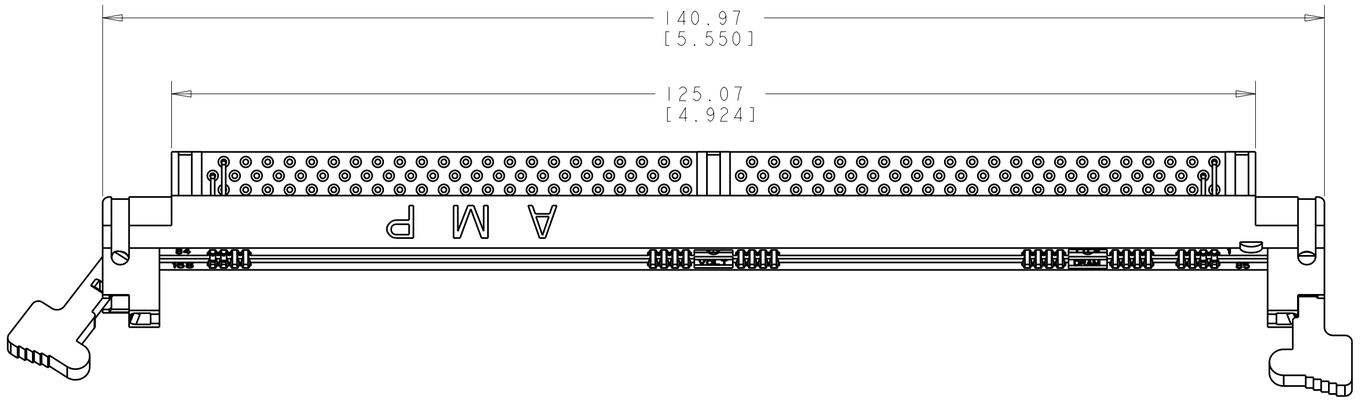

NOTES:
1. MATERIAL:
   HOUSING AND EJECTOR:
     HIGH TEMPERATURE NYLON
   CONTACT:
     PHOSPHOR BRONZE
2. FINISH:
   CONTACT AREA:
     0.00076[.000030] MIN THICK GOLD OVER
     0.00381[.000150] MIN THICK NICKEL
   SOLDERTAIL:
     0.00381[.000150] MIN THICK MATTE TIN OVER
     0.00064[.000025] MIN THICK NICKEL
3. MODULE BOARD PADS:
   FOR OPTIMUM PERFORMANCE PADS SHOULD BE SMOOTH AND FLAT
   PADS TO BE PLATED WITH:
     0.00102[.000040] MIN THICK GOLD OVER
     0.00127[.000050] MIN THICK NICKEL
4. FINISH:
   CONTACT AREA:
     0.00076[.000030] MIN THICK GOLD OVER
     0.00381[.000150] MIN THICK NICKEL
   SOLDERTAIL:
     GOLD FLASH OVER 0.00064[.000025] MIN THICK NICKEL

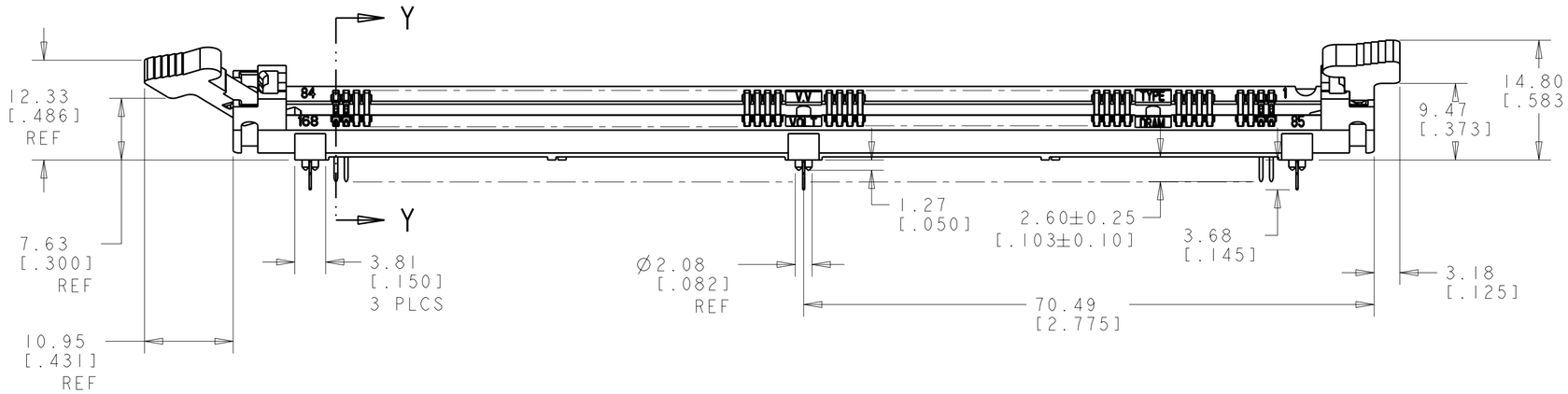

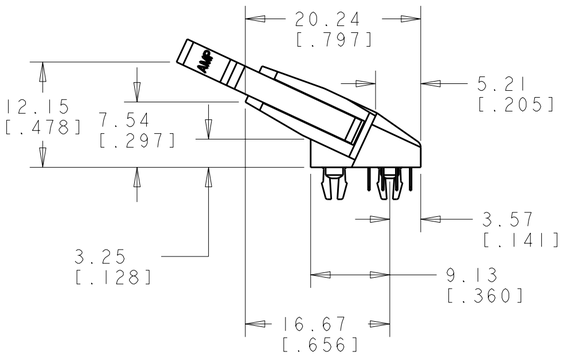

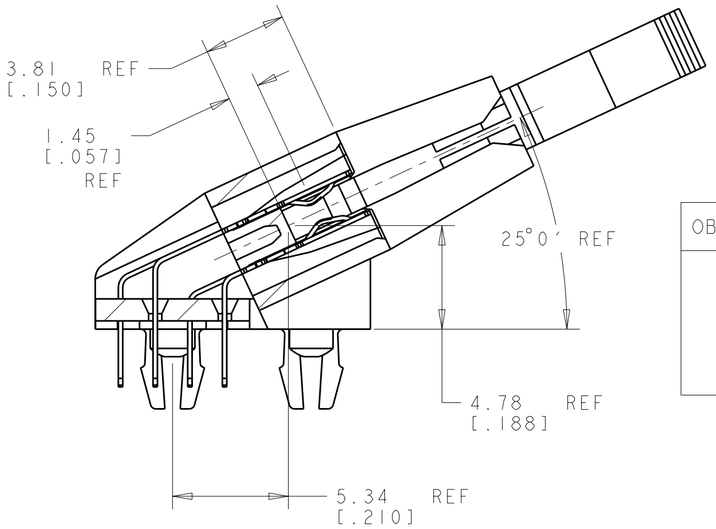

SECTION Y-Y
SCALE 5:1

OBSOLETE	~~4~~	~~DETAIL C~~	~~DETAIL A~~	~~NON-BUFFERED DRAM, 3.3 VOLT~~	~~2-5390195-6~~
	2	DETAIL C	DETAIL A	NON-BUFFERED DRAM, 3.3 VOLT	5390195-6
	2	DETAIL A	DETAIL A	STD DRAM, 3.3 VOLT	5390195-4
	FINISH	KEY #1	KEY #2	PART DESCRIPTION	PART NUMBER

THIS DRAWING IS A CONTROLLED DOCUMENT FOR TYCO ELECTRONICS CORPORATION. IT IS SUBJECT TO CHANGE AND THE CONTROLLING ENGINEERING ORGANIZATION SHOULD BE CONTACTED FOR THE LATEST REVISION.

DIMENSIONS: mm[INCHES]

TOLERANCES UNLESS OTHERWISE SPECIFIED:
0 PLC ±-
1 PLC ±-
2 PLC ±0.13[.005]
3 PLC ±-
4 PLC ±-
ANGLES ±-

MATERIAL -
FINISH -

DWN M.YEOMANS 13JAN05
CHK M.YEOMANS 13JAN05
APVD S.BURKHOLDER 13JAN05
PRODUCT SPEC -
APPLICATION SPEC -
WEIGHT -

tyco Electronics
Tyco Electronics Corporation
SH/CN GuiPingRD 668#

NAME LOW PROFILE (25 DEG) DIMM 2P SOCKET CENTER METAL BOARD LOCK 168 POSITION

SIZE	CAGE CODE	DRAWING NO	RESTRICTED TO
A2	00779	C-5390195	-

CUSTOMER DRAWING | SCALE 1:1 | SHEET 1 OF 3 | REV C

5390195

AMP 1471-9 REV 31MAR2000

Pro/ENGINEER DRAWING

THIS DRAWING IS UNPUBLISHED. RELEASED FOR PUBLICATION 20
© COPYRIGHT 20 BY TYCO ELECTRONICS CORPORATION, ALL RIGHTS RESERVED.

LOC	DIST
ES	00

REVISIONS

P	LTR	DESCRIPTION	DATE	DWN	APVD
	-	SEE SHEET 1	-	-	-

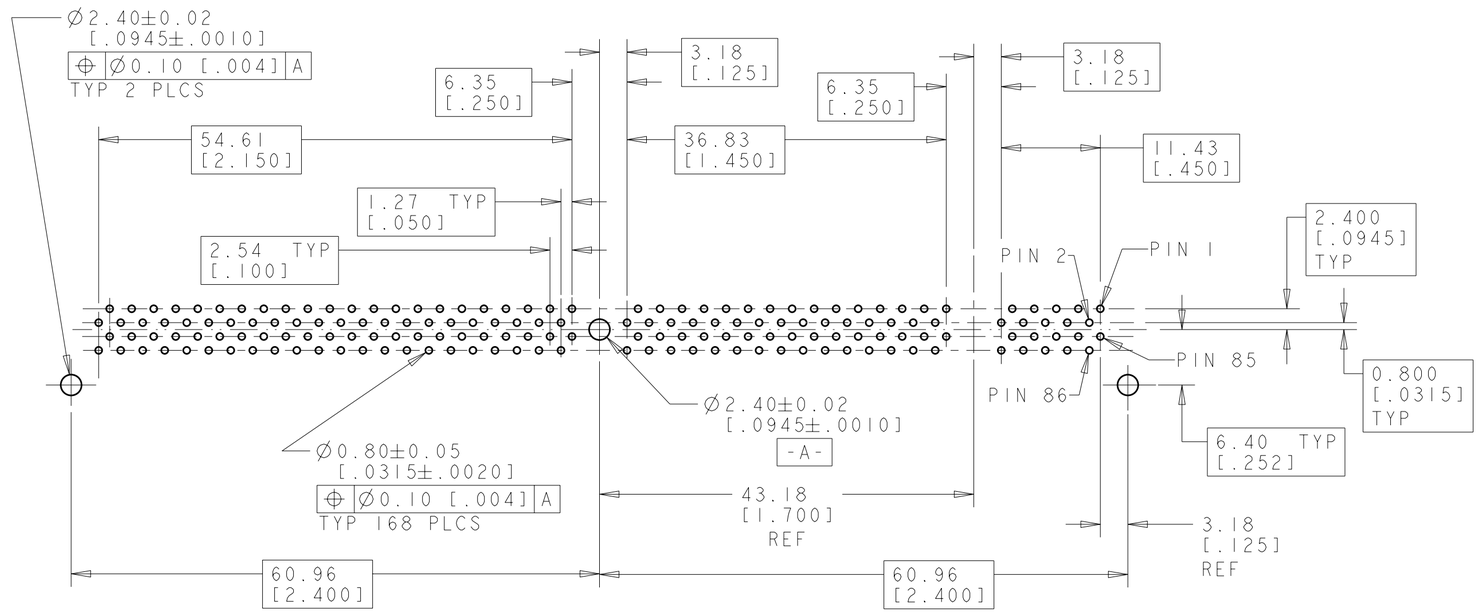

RECOMMENDED CIRCUIT BOARD HOLE LAYOUT

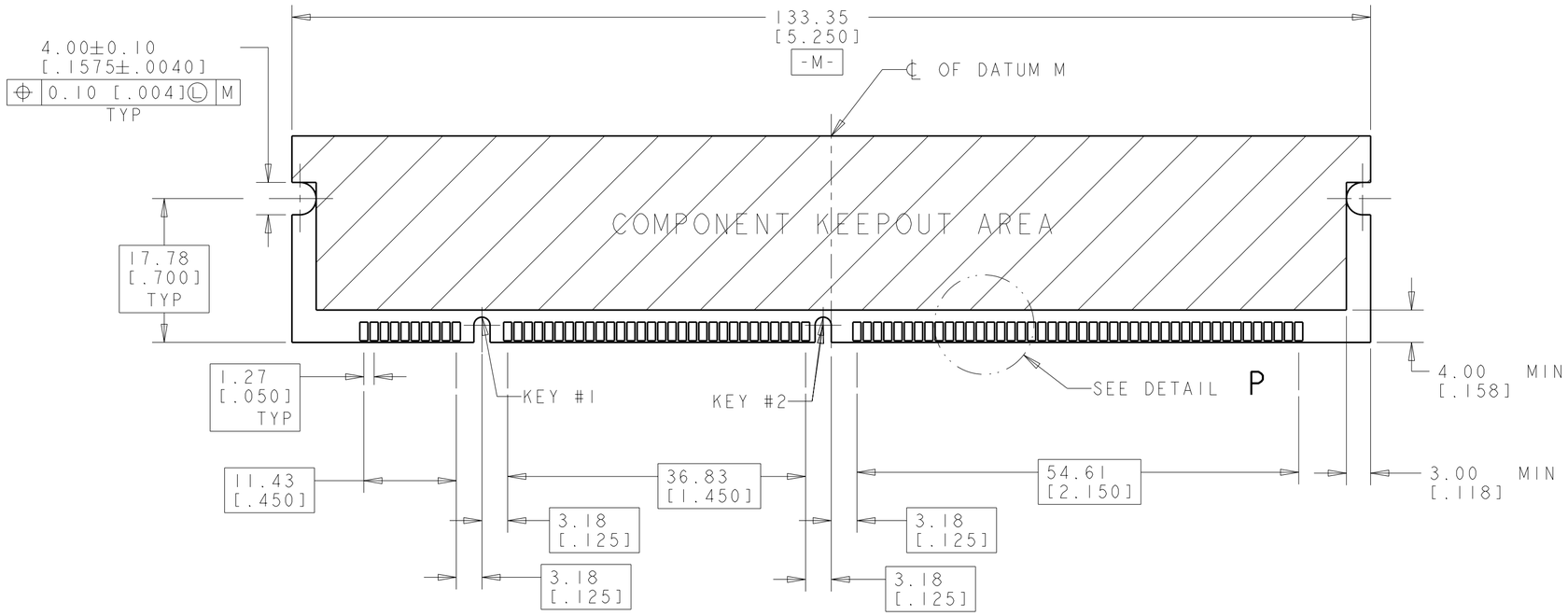

RECOMMENDED MODULE LAYOUT

SEE JEDEC SPEC. MO-161 FOR COMPLETE MODULE DETAILS
1.27±0.10[.050±.004] THICK ACROSS CONTACT PADS

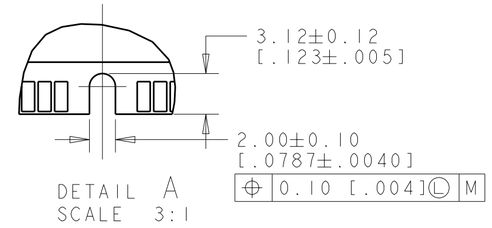

DETAIL A
SCALE 3:1

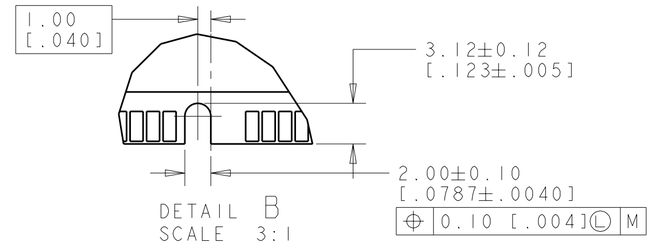

DETAIL B
SCALE 3:1

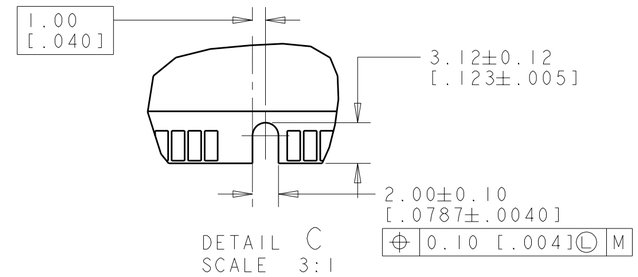

DETAIL C
SCALE 3:1

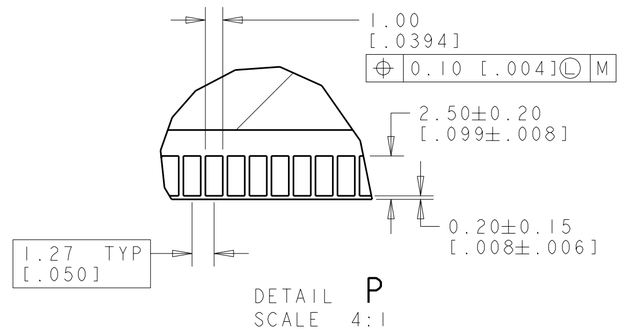

DETAIL P
SCALE 4:1

5390195

THIS DRAWING IS A CONTROLLED DOCUMENT FOR TYCO ELECTRONICS CORPORATION. IT IS SUBJECT TO CHANGE AND THE CONTROLLING ENGINEERING ORGANIZATION SHOULD BE CONTACTED FOR THE LATEST REVISION.

DIMENSIONS: mm[INCHES]

TOLERANCES UNLESS OTHERWISE SPECIFIED:
0 PLC ±-
1 PLC ±-
2 PLC ±0.13[.005]
3 PLC ±-
4 PLC ±-
ANGLES ±-

MATERIAL -
FINISH -

DWN M.YEOMANS 13JAN05
CHK M.YEOMANS 13JAN05
APVD S.BURKHOLDER 13JAN05
PRODUCT SPEC -
APPLICATION SPEC -
WEIGHT -

tyco Electronics
Tyco Electronics Corporation
SH/CN GuiPingRD 668#

NAME LOW PROFILE (25 DEG) DIMM 2P SOCKET CENTER METAL BOARD LOCK 168 POSITION

SIZE	CAGE CODE	DRAWING NO	RESTRICTED TO
A2	00779	C-5390195	-

CUSTOMER DRAWING | SCALE 4:1 | SHEET 2 OF 3 | REV C

THIS DRAWING IS UNPUBLISHED. RELEASED FOR PUBLICATION 20
© COPYRIGHT 20 BY TYCO ELECTRONICS CORPORATION, ALL RIGHTS RESERVED.

LOC	DIST
ES	00

REVISIONS

P	LTR	DESCRIPTION	DATE	DWN	APVD
	-	SEE SHEET 1	-	-	-

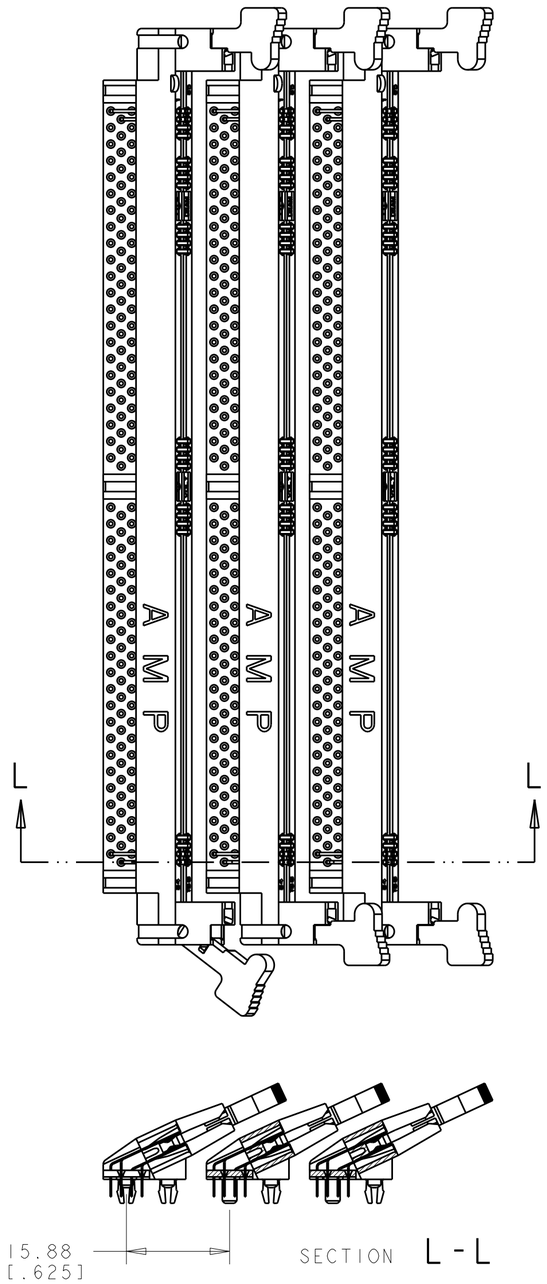

MINIMUM REPAIRABLE SOCKET TO SOCKET SPACING

WITH THE MODULES REMOVED, SOCKETS ON 15.88 [.625] OR GREATER SPACING CAN BE INDIVIDUALLY UNSOLDERED FROM THE BOARD AND REMOVED IF NECESSARY.

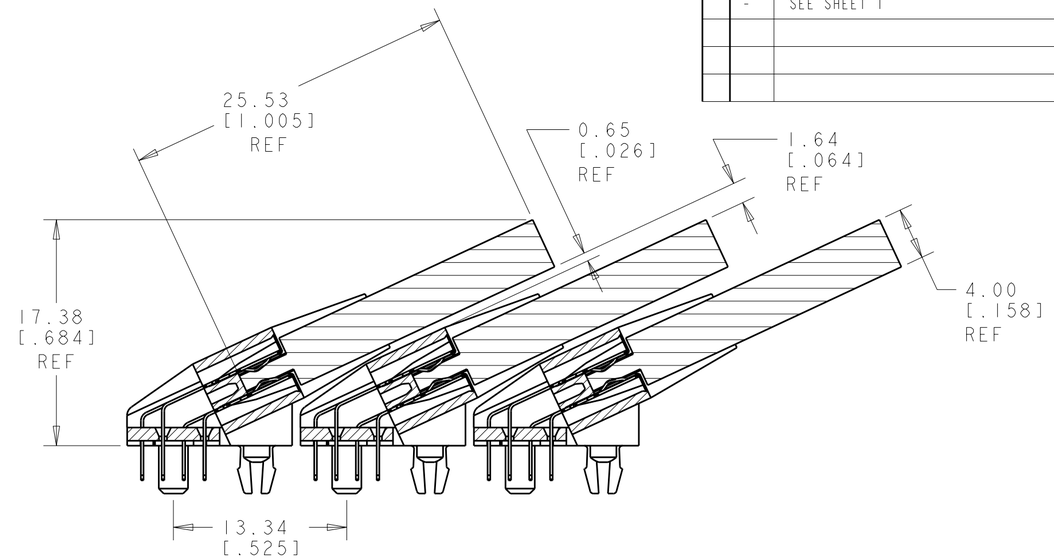

MINIMUM SOCKET TO SOCKET SPACING

WITH A 4.00 [.158] WIDE MODULE BOARD, A SOCKET TO SOCKET SPACING OF 13.34 [.525] WILL LEAVE APPROXIMATELY 0.65 [.026] OF CLEARANCE BETWEEN THE MODULE AND THE NEXT SOCKET BODY. THIS SPACING MAY OR MAY NOT BE SUITABLE DEPENDING ON YOUR MINIMUM GAP REQUIREMENTS.

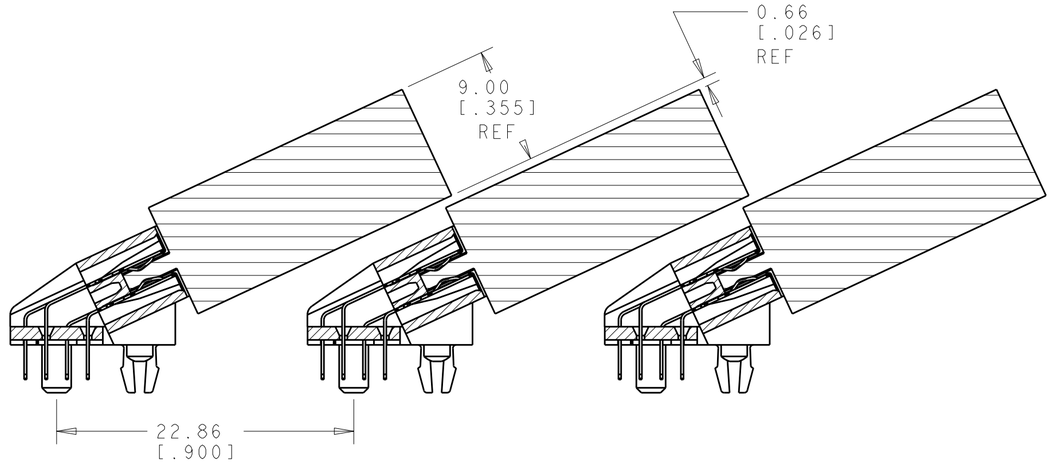

POSSIBLE SOCKET TO SOCKET SPACING FOR 9MM SOCKET

WITH A 9.00 [.355] WIDE MODULE BOARD, A SOCKET TO SOCKET SPACING OF 22.86 [.900] WILL LEAVE APPROXIMATELY 0.66 [.026] CLEARANCE BETWEEN THE ADJACENT MODULES. THIS SPACING MAY OR MAY NOT BE SUITABLE DEPENDING ON YOUR MINIMUM GAP REQUIREMENTS.

THIS DRAWING IS A CONTROLLED DOCUMENT FOR TYCO ELECTRONICS CORPORATION. IT IS SUBJECT TO CHANGE AND THE CONTROLLING ENGINEERING ORGANIZATION SHOULD BE CONTACTED FOR THE LATEST REVISION.

DIMENSIONS: mm[INCHES]

TOLERANCES UNLESS OTHERWISE SPECIFIED:
0 PLC ±-
1 PLC ±-
2 PLC ±0.13[.005]
3 PLC ±-
4 PLC ±-
ANGLES ±-

MATERIAL -
FINISH -

DWN	M.YEOMANS	13JAN05
CHK	M.YEOMANS	13JAN05
APVD	S.BURKHOLDER	13JAN05

PRODUCT SPEC -
APPLICATION SPEC -
WEIGHT -

tyco Electronics — Tyco Electronics Corporation
SH/CN GuiPingRD 668#

NAME: LOW PROFILE (25 DEG) DIMM 2P SOCKET CENTER METAL BOARD LOCK 168 POSITION

SIZE	CAGE CODE	DRAWING NO	RESTRICTED TO
A2	00779	C-5390195	-

CUSTOMER DRAWING | SCALE 1:1 | SHEET 3 OF 3 | REV C

5390195