THIS DRAWING IS UNPUBLISHED. RELEASED FOR PUBLICATION -,- .
© COPYRIGHT - By - ALL RIGHTS RESERVED.

LOC	DIST
AF	50

REVISIONS

P	LTR	DESCRIPTION	DATE	DWN	APVD
	W	REVISED PER ECR-12-013445	18OCT12	KH	PD

1 CONTINUOUS STRIP ON REELS

2 FEED TO BE .535±.005.

3 REVERSE REELING W/ PAPER INTERLEAVING

4 PRELIMINARY - NOT FOR PRODUCTION

5 OBSOLETE PARTS: OBSOLETE CIS STREAMLINING PER D.RENAUD/D.SINISI

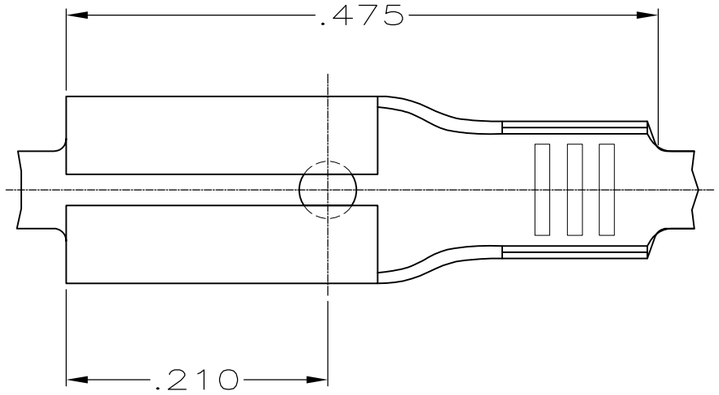

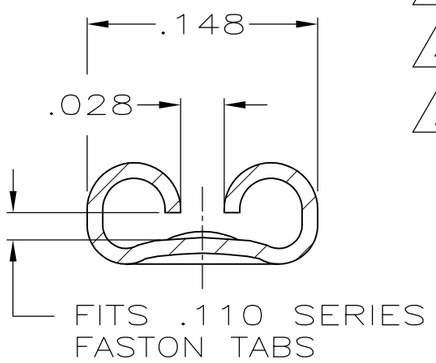

SECTION A-A
SCALE 10:1

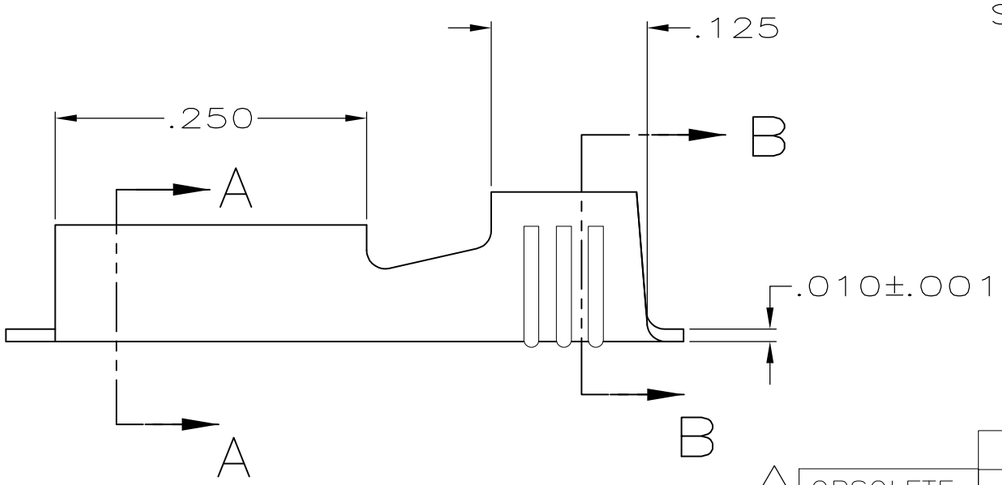

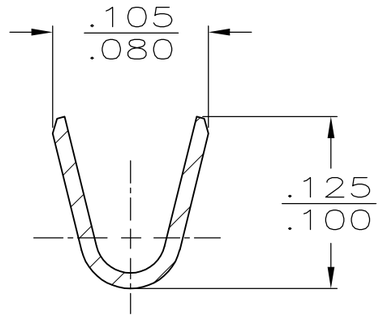

SECTION B-B
SCALE 10:1

	PRE-TIN			3 4 42399-5
5 OBSOLETE	-	20-18 or (2) #20's	.020	42399-2
	PRE-TIN			42399-1
	FINISH	WIRE SIZE	MATING TAB THK ±.001	PART NO

THIS DRAWING IS A CONTROLLED DOCUMENT.

DIMENSIONS: INCHES

TOLERANCES UNLESS OTHERWISE SPECIFIED:

0 PLC	± -
1 PLC	± -
2 PLC	± -
3 PLC	± .015
4 PLC	± -
ANGLES	± -

MATERIAL: BRASS

FINISH: SEE TABLE

DWN	JR RUTH	4/1/91
CHK	MS FEHER	4/1/91
APVD	C MEYERS	4/1/91
PRODUCT SPEC	-	
APPLICATION SPEC	-	
WEIGHT	-	

CUSTOMER DRAWING

TE Connectivity

NAME: RECEPTACLE, FASTON, .110 SERIES

SIZE	CAGE CODE	DRAWING NO	RESTRICTED TO
A3	00779	C-42399	-

SCALE	SHEET	REV
8:1	1 OF 1	W