THIS COPY IS PROVIDED ON A RESTRICTED BASIS AND IS NOT TO BE USED IN ANY WAY DETRIMENTAL TO THE INTERESTS OF PANDUIT CORP.

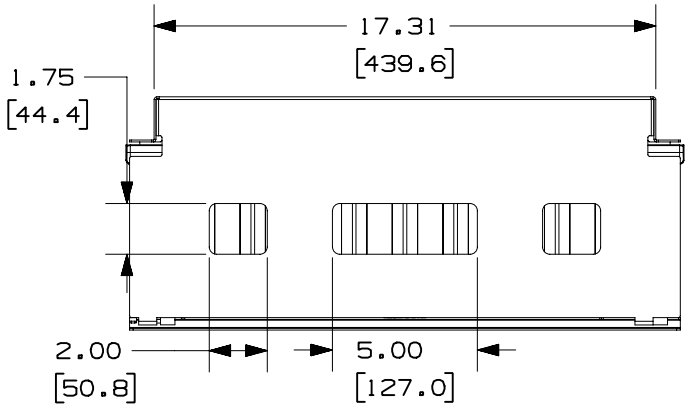


| PANDUIT P/N | WEIGHT |
|---|---|
| NCMHAEF2 | 8.4 LBS/EACH<br>3810 g/EACH |

NOTES:
1. VISIT OUR ON-LINE CATALOG AT WWW.PANDUIT.COM FOR A CURRENT LIST OF PRODUCTS APPLICABLE FOR USE WITH THIS PART.
2. COMPONENTS:
   1- CABLE MANAGER
   1- REMOVABLE HINGED DOOR
   4- #12-24 X .5" SCREWS
   4- M6 X 15mm SCREWS
3. DIMENSIONS IN PARENTHESIS ARE METRIC.

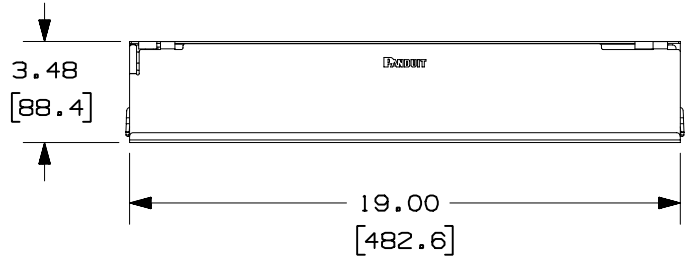


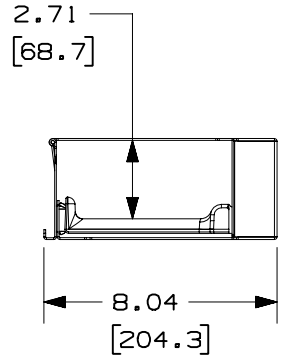


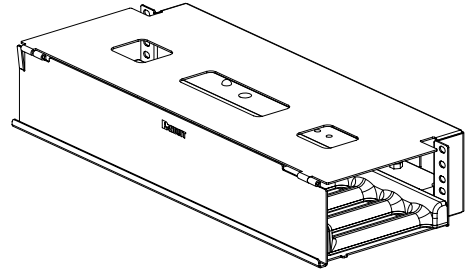

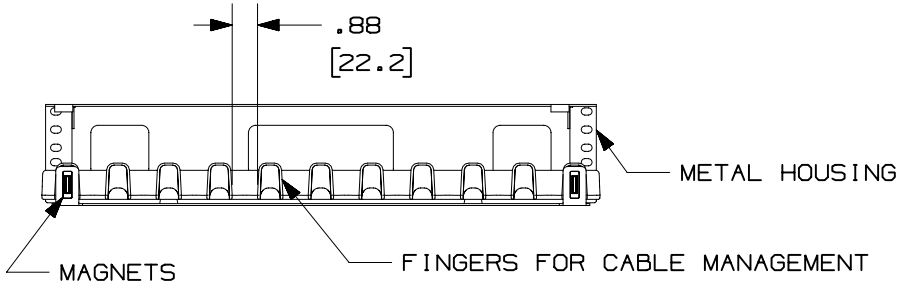


MODEL FILENAME: V10073AA_NCMHAEF2_08.PRT

CAD FILENAME/LAYERS: V10073AA_DC_08A.PRT

PANDUIT CORP. TINLEY PARK, ILLINOIS

2 RU ACTIVE EQUIPMENT CABLE MANAGER
(NCMHAEF2)
CUSTOMER DRAWING

UNLESS OTHERWISE SPECIFIED, DIMENSIONAL TOLERANCES ARE:
(.X) ± .03 (.XXX) ± .005
(.XX) ± .015 ANGLES ± 1°

UNLESS OTHERWISE SPECIFIED, ALL DIMENSIONS ARE GIVEN IN INCHES, THIRD ANGLE PROJECTION.

| REV | DATE | BY | CHK | DESCRIPTION | ECN - R | CUST | SUP | OTH |
|---|---|---|---|---|---|---|---|---|
| R | 8-1-03 | JDWE | | RELEASED TO PRODUCTION | 10079-03 | | | |

DRAWN BY: JDWE
DATE: 8-1-03
CHK'D:

MAT'L:
HOUSING- STEEL
COVER- STEEL
FINGERS- ABS

SCALE: NONE
DRAWING NO.: 10073-09
DWG SIZE: A