MATERIAL NUMBER LOOSE PCS	ENGINEERING NUMBER LOOSE PCS	MATERIAL NUMBER ON STRIP	ENGINEERING NUMBER ON STRIP	MATERIAL NUMBER ON TAPE	ENGINEERING NUMBER ON TAPE	MATERIAL NUMBER REVERSE WOUND	ENGINEERING NUMBER REVERSE WOUND	ACCEPTS TAB SIZE	STOCK THICKNESS	"A" MAX	"B" MAX	"F" REF	"G" MAX	"H" REF
190020024	BB-5263	190020027	BB-5263Z	190020025	BB-5263T	190020026	BB-5263TR	.250x.032 (6.35x0.81)	.016/0.41	.89/22.6	.38/9.7	.16/4.1	.20/5.1	1.425/36.20
190020040	BB-5287	190020041	BB-5287Z	190020048	BB-5287T	---	---	.205x.020 (5.21x0.51)	.016/0.41	.80/20.3	.32/8.1	.16/4.1	.22/5.6	1.415/35.94
190020042	BB-5289	190020061	BB-5289Z	190020043	BB-5289T	---	---	.205x.032 (5.21x0.81)	.016/0.41	.80/20.3	.32/8.1	.16/4.1	.22/5.6	1.415/35.94
190020028	BB-5269	190020030	BB-5269Z	190020029	BB-5269T	---	---	.187x.020 (4.75x0.51)	.016/0.41	.80/20.3	.32/8.1	.16/4.1	.22/5.6	1.415/35.94
190020031	BB-5273	190020033	BB-5273Z	190020032	BB-5273T	---	---	.187x.032 (4.75x0.81)	.016/0.41	.80/20.3	.32/8.1	.16/4.1	.22/5.6	1.415/35.94
190020034	BB-5277	190020036	BB-5277Z	190020035	BB-5277T	---	---	.110x.020 (2.79x0.51)	.012/0.31	.80/20.3	.23/5.8	.13/3.3	.22/5.6	1.395/35.43
190020037	BB-5281	190020039	BB-5281Z	190020038	BB-5281T	---	---	.110x.032 (2.79x0.81)	.012/0.31	.80/20.3	.23/5.8	.13/3.3	.22/5.6	1.395/35.43

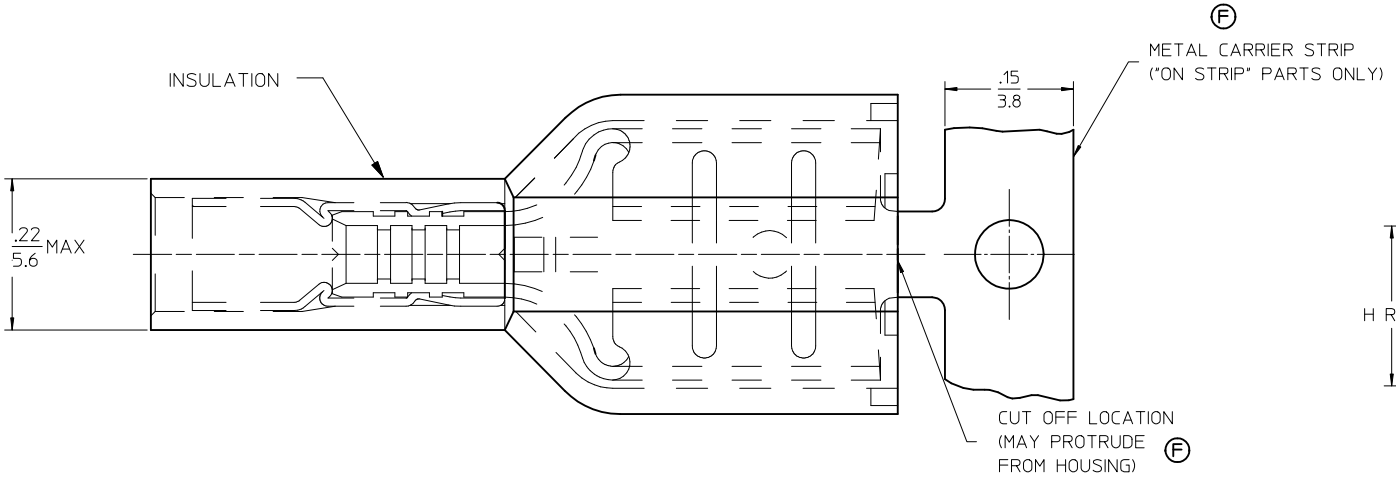

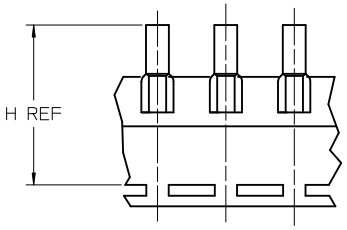

PARTS ON TAPE

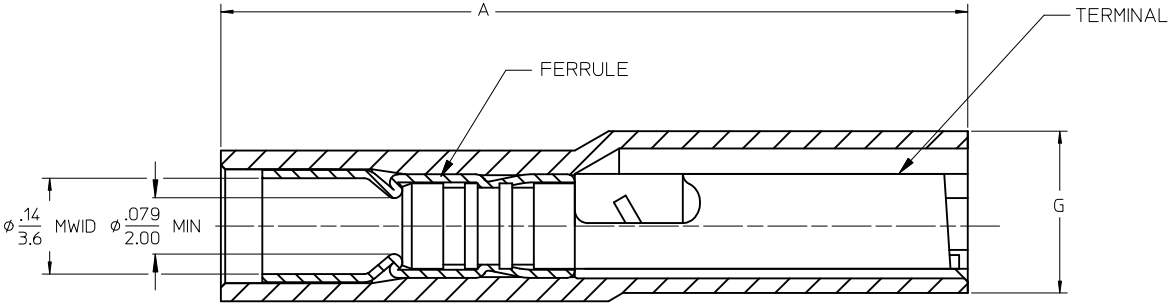

FOR CLARITY, TERMINAL COMPONENT IS NOT SECTIONED

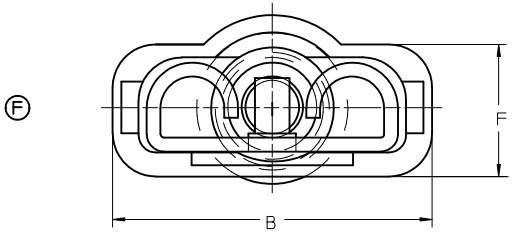

SALES DRAWING

NOTES:

1. MATERIAL: TERMINAL BRASS
   TERMINAL PLATING: ELECTRO TIN
   FERRULE: COPPER ALLOY (F)
   FERRULE PLATING: ELECTRO TIN
   INSULATION: NYLON 94V2, COLOR BLUE.
2. MWID = MAXIMUM WIRE INSULATION DIAMETER
3. ASSEMBLY IS ROHS COMPLIANT.

FERRULE MAT'L DESCR
EC NO: WNA2009-0510
DRWN:ETHRODAHL 2010/01/04
CH'KD:JMACNEIL 2010/01/05
APPR: JMACNEIL 2010/01/05
DESCRIPTION
REV

QUALITY SYMBOLS
▼=0
▽(C)=0

GENERAL TOLERANCES (UNLESS SPECIFIED)

	mm	INCH
4 PLACES	± ---	± ---
3 PLACES	± ---	± .005
2 PLACES	± 0.13	± .01
1 PLACE	± 0.25	± ---

ANGULAR ±1/2°

DRAFT WHERE APPLICABLE MUST REMAIN WITHIN DIMENSIONS

DIMENSION STYLE: IN/MM
SCALE: 1:1
DESIGN UNITS: INCH
THIRD ANGLE PROJECTION

DRAWN BY: BENDERLE DATE: 2005/04/11
CHECKED BY: R DEROSS DATE: 2005/04/11
APPROVED BY: R DEROSS DATE: 2005/04/11

TITLE: AVIKRIMP FEMALE FIQD 16-14 AWG

molex MOLEX INCORPORATED

MATERIAL NO.: SEE CHART
DOCUMENT NO.: SD-19002-004
SHEET NO.: 1 OF 1
SIZE: C

THIS DRAWING CONTAINS INFORMATION THAT IS PROPRIETARY TO MOLEX INCORPORATED AND SHOULD NOT BE USED WITHOUT WRITTEN PERMISSION

Mouser Electronics

Authorized Distributor

Click to View Pricing, Inventory, Delivery & Lifecycle Information:

Molex:
BB-5263