THIS DRAWING IS UNPUBLISHED. RELEASED FOR PUBLICATION - ,- .
© COPYRIGHT - By - ALL RIGHTS RESERVED.

LOC	DIST
GP	00

REVISIONS

P	LTR	DESCRIPTION	DATE	DWN	APVD
	G1	REVISED PER ECR-15-007038	28SEP2015	NK	PQ

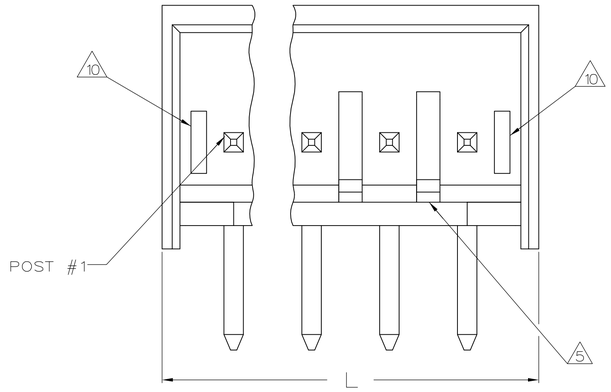

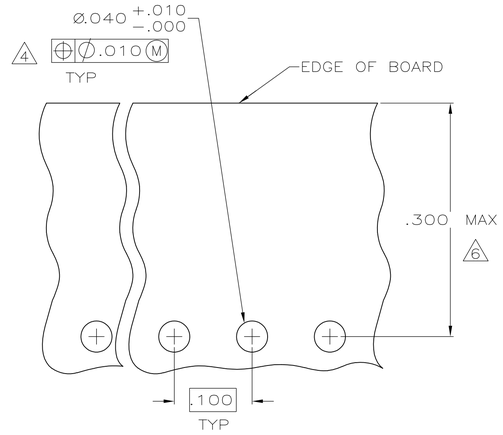

RECOMMENDED MOUNTING HOLE PATTERN 2
FOR .063 THK PRINTED CIRCUIT BOARD

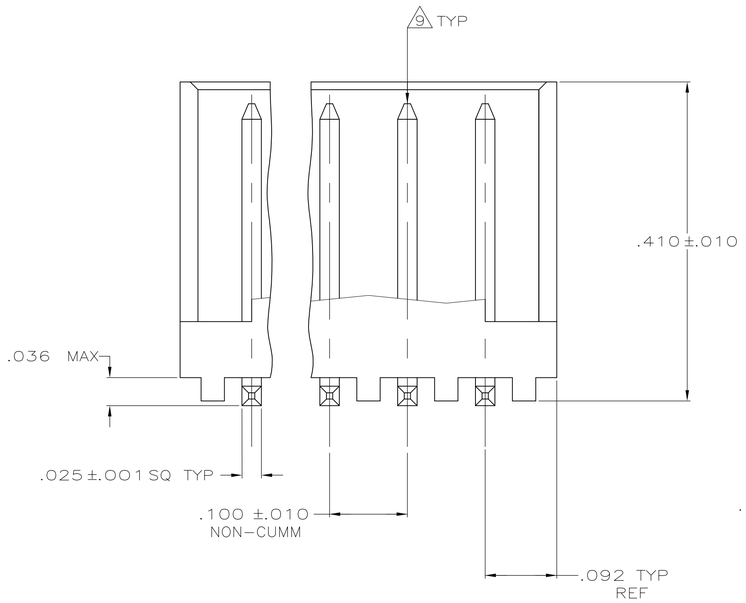

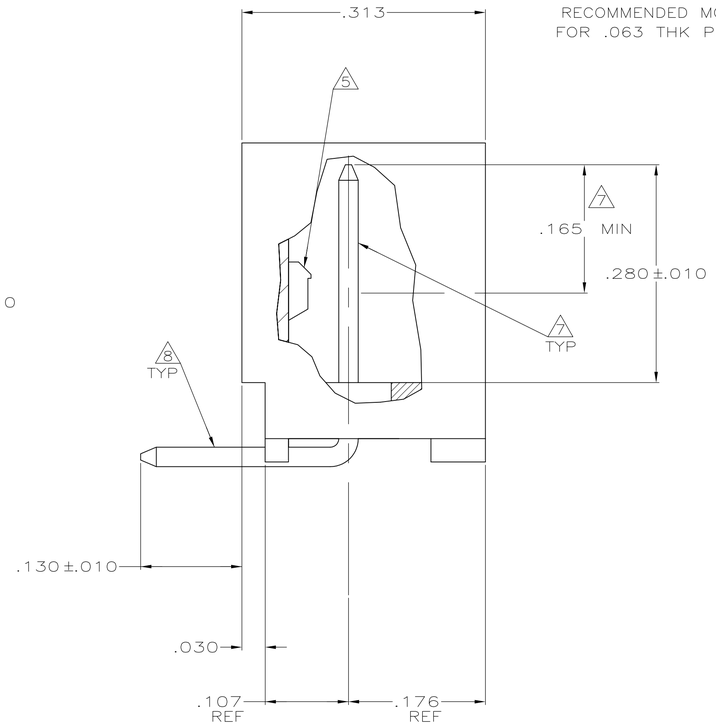

1. MATERIAL: HEADER – POLYESTER UL94V-0 (BLACK)
   POST – COPPER ALLOY.
2. SOLDER SIDE OF P.C. BOARD SHOWN.
3. PARTS COMPLY WITH TYCO ELECTRONICS SOLDERABILITY SPEC 109-11-12 (TIN).
4. ONE HOLE MAY BE UNDERSIZED (.032–.035 DIA) FOR ASSEMBLY RETENTION DURING WAVE SOLDERING.
5. LATCH DETENT FEATURE OCCURS 2 PLACES ON EACH END (MAXIMUM OF FOUR PER PART). FOR 2 THRU 5 CIRCUIT HEADERS, LATCH FEATURE OCCURS BETWEEN EACH CIRCUIT.
6. COORDINATE DIMENSION APPLIES FROM CENTER OF ACTUAL FEATURE.
7. GOLD PLATE, .000030 MIN, FOUR SIDES AS SHOWN, OVER NICKEL UNDERPLATE, .000050 MIN, ALL SIDES AND ENTIRE LENGTH OF POST.
   OR
   GOLD FLASH OVER PALLADIUM-NICKEL, .000030 MIN TOTAL THICKNESS AS SHOWN, OVER NICKEL UNDERPLATE .000050 MIN ALL SIDES AND ENTIRE LENGTH OF POST. EITHER PLATING MAY BE PROVIDED AT THE DISCRETION OF TYCO ELECTRONICS.
8. TIN PLATE, ALL FOUR SIDES, .140 REF.
9. POST MUST WITHSTAND 3.0 LBS (13.34 NEWTONS) MIN FORCE WITHOUT DISLODGING, EITHER DIRECTION.
10. SLOTS MAY OR MAY NOT APPEAR ON THESE PARTS.
11. MATTE TIN (100%) PLATE, ALL FOUR SIDES, .140 REF.
12. UL RECOGNIZED (UR) LOGO AND CSA LOGO WILL APPEAR ON THE SIDE OF THE PART. AMP LOGO MAY APPEAR ON THE SIDE OF THE PART OR ON THE BOTTOM.
13. OBSOLETE PART NUMBER

IN	MM	NO OF POSITIONS	PART NUMBER
1.484	37.69	14	4-644898-4
1.384	35.15	13	4-644898-3
1.284	32.61	12	4-644898-2
1.184	30.07	11	4-644898-1
1.084	27.53	10	4-644898-0
.984	24.99	9	3-644898-9
.884	22.45	8	3-644898-8
.784	19.91	7	3-644898-7
.684	17.37	6	3-644898-6
.584	14.83	5	3-644898-5
.484	12.29	4	3-644898-4
.384	9.75	3	3-644898-3
.284	7.21	2	3-644898-2
1.484	37.69	14	13 ~~1-644898-4~~
1.384	35.15	13	13 ~~1-644898-3~~
1.284	32.61	12	13 ~~1-644898-2~~
1.184	30.07	11	13 ~~1-644898-1~~
1.084	27.53	10	13 ~~1-644898-0~~
.984	24.99	9	13 ~~644898-9~~
.884	22.45	8	13 ~~644898-8~~
.784	19.91	7	13 ~~644898-7~~
.684	17.37	6	13 ~~644898-6~~
.584	14.83	5	13 ~~644898-5~~
.484	12.29	4	13 ~~644898-4~~
.384	9.75	3	13 ~~644898-3~~
.284	7.21	2	13 ~~644898-2~~
L		HEADER ASSEMBLY	

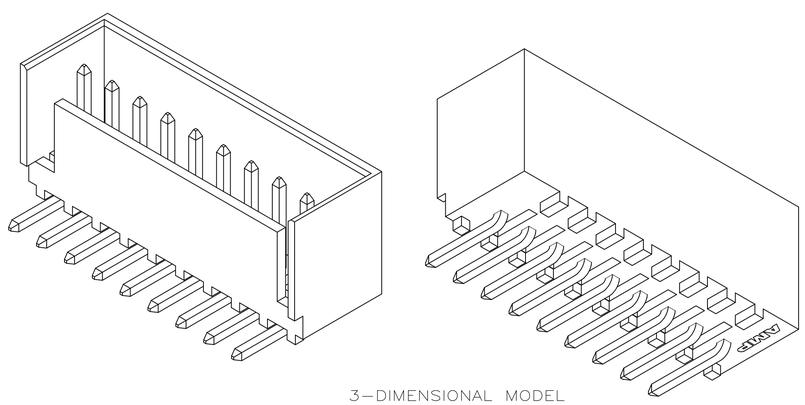

3-DIMENSIONAL MODEL
NTS

.025	0.64	.107	2.72	–	–
.010	0.25	.100	2.54	.410	10.41
.005	0.13	.092	2.34	.313	7.95
.001	0.03	.063	1.60	.300	7.62
.0003500	0.00889	.040	1.02	.280	7.11
.0001500	0.00381	.036	0.91	.176	4.47
.0000500	0.00127	.035	0.89	.165	4.19
.0000300	0.00076	.032	0.81	.140	3.56
.000	0.00	.030	0.76	.130	3.30
IN	MM	IN	MM	IN	MM

CONVERSION TABLE

THIS DRAWING IS A CONTROLLED DOCUMENT.

DIMENSIONS: INCHES

TOLERANCES UNLESS OTHERWISE SPECIFIED:
0 PLC ± –
1 PLC ± –
2 PLC ± –
3 PLC ± .005
4 PLC ± –
ANGLES ± –

MATERIAL 1
FINISH 7 8 11

DWN K. WHITAKER 27JUNE2005
CHK D. BOSSI 27JUNE0520
APVD D. BOSSI 27JUNE2005
PRODUCT SPEC —
APPLICATION SPEC —
WEIGHT —

TE Connectivity

NAME CST-100 SHROUDED HEADER ASSEMBLY, FRICTION LOCK, RIGHT ANGLE POST, .000030 GOLD

SIZE	CAGE CODE	DRAWING NO	RESTRICTED TO
A1	00779	C-644898	—

CUSTOMER DRAWING | SCALE 10:1 | SHEET 1 OF 1 | REV G1

4805 (3/11)