MP10G SERIES

GLASS PASSIVATED BRIDGE RECTIFIERS	REVERSE VOLTAGE - **50** to **1000**Volts FORWARD CURRENT - **10.0** Amperes

FEATURES

- Surge overload rating -200 amperes peak
- Low forward voltage drop
- Small size; simple installation
- Sliver plated copper leads
- Mounting position: Any

MP8

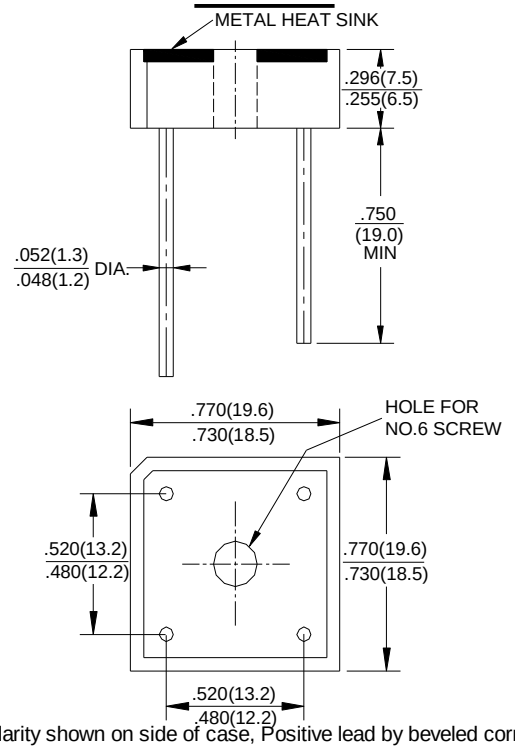

Polarity shown on side of case, Positive lead by beveled corner.

Dimensions in inches and (milimeters)

MAXIMUM RATINGS AND ELECTRICAL CHARACTERISTICS

Rating at 25℃ ambient temperature unless otherwise specified.

Single phase, half wave ,60Hz, resistive or inductive load.

For capacitive load, derate current by 20%

CHARACTERISTICS	SYMBOL	MP 10005G	MP 1001G	MP 1002G	MP 1004G	MP 1006G	MP 1008G	MP 1010G	UNIT
Maximum Recurrent Peak Reverse Voltage	V_{RRM}	50	100	200	400	600	800	1000	V
Maximum RMS Bridge Input Voltage	V_{RMS}	30	70	140	280	420	560	700	V
Maximum Average Forward Rectified Output Current at Tc=50℃	$I_{(AV)}$	10.0							A
Maximum Average Forward Rectified Output Current at TA=100℃ (Note1)	$I_{(AV)}$	6.0							A
Maximum Average Forward Rectified Output Current at TA=50℃ (Note2)	$I_{(AV)}$	6.0							A
Peak Forward Surage Current 8.3ms Single Half Sine-Wave Super Imposed on Rated Load	I_{FSM}	200							A
Maximum Forward Voltage Drop Per Bridge Element at 5.0A Peak	V_F	1.1							V
Maximum Reverse Current at Rated DC Blocking Voltage Per Element TA=25℃	I_R	10.0							uA
Maximum Reverse Current at Rated DC Blocking Voltage Per Element TA=100℃	I_R	1.0							mA
Operating Temperature Rang	T_J	-55 to +150							℃
Storage Temperature Rang	T_{STG}	-55 to +150							℃

Notes:1.Unit mounted on metal chassis

2. Unit mounted on P.C. board

FIG.1-DERATING CURVE
OUTPUT RECTIFIED CURRENT

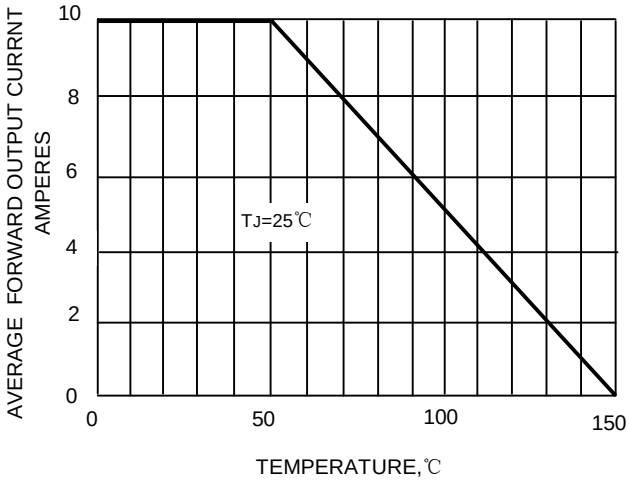

FIG.2-MAXIMUM FORWARD SURGE CURRENT

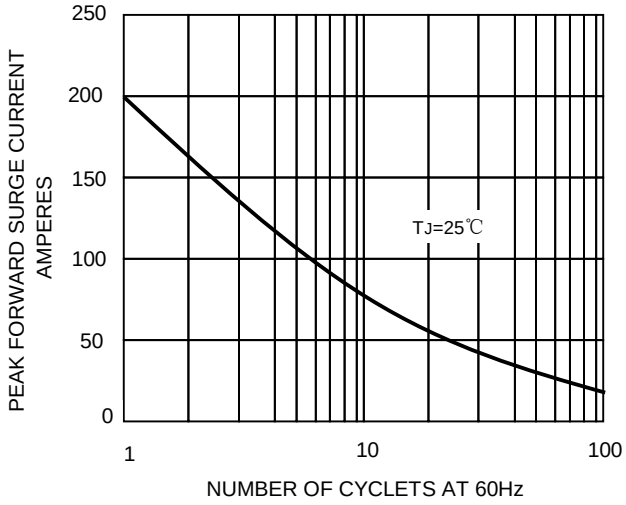

FIG.3-TYPICAL FORWARD
CHARACTERISTICS

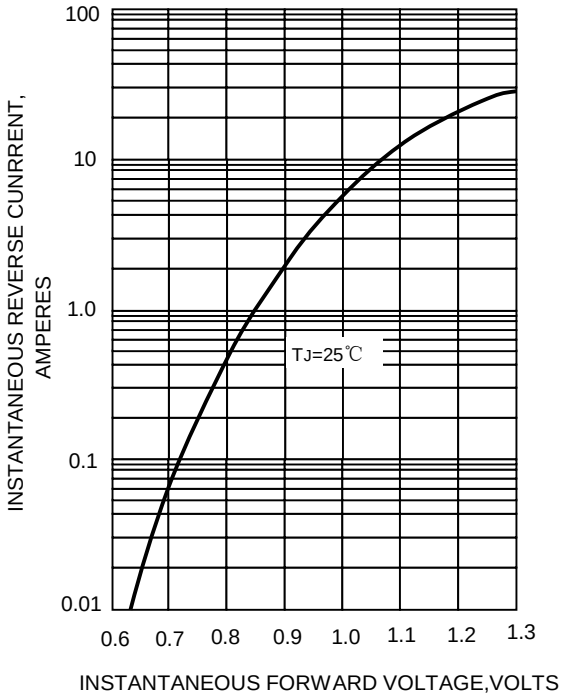
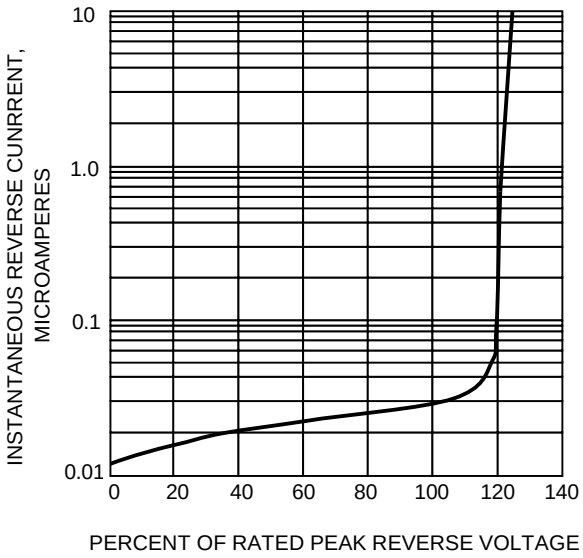
FIG.4-TYPICAL REVERSE
CHARACTERISTICS