THIS DRAWING IS UNPUBLISHED. RELEASED FOR PUBLICATION -,- .
© COPYRIGHT - BY TYCO ELECTRONICS CORPORATION. ALL INTERNATIONAL RIGHTS RESERVED.

LOC	DIST
AF	50

REVISIONS

P	LTR	DESCRIPTION	DATE	DWN	APVD
	P	REVISED PER ECR-08-007819	19NOV08	HMR	DD

1 CONTINUOUS STRIP ON REEL.

2 PRELIMINARY - NOT FOR PRODUCTION.

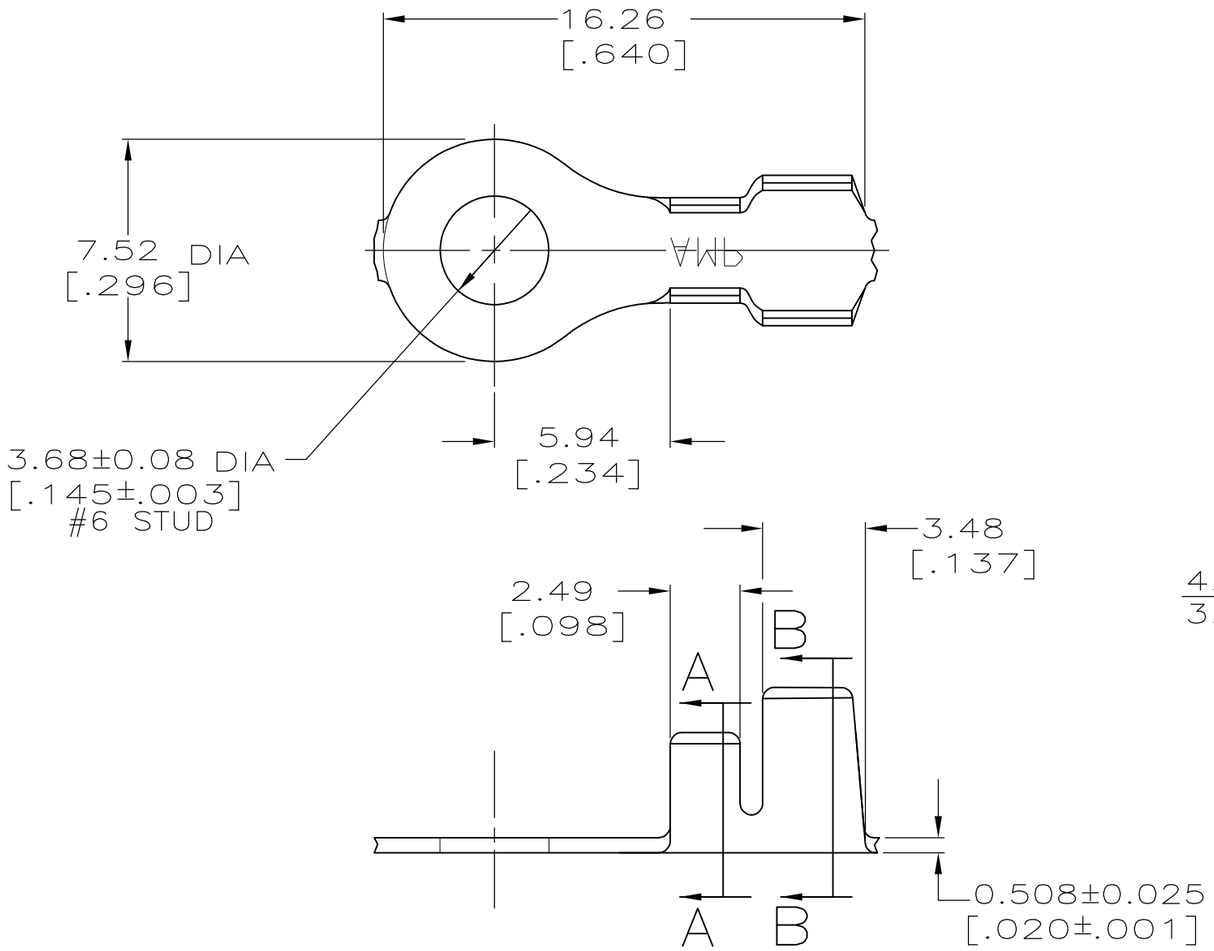

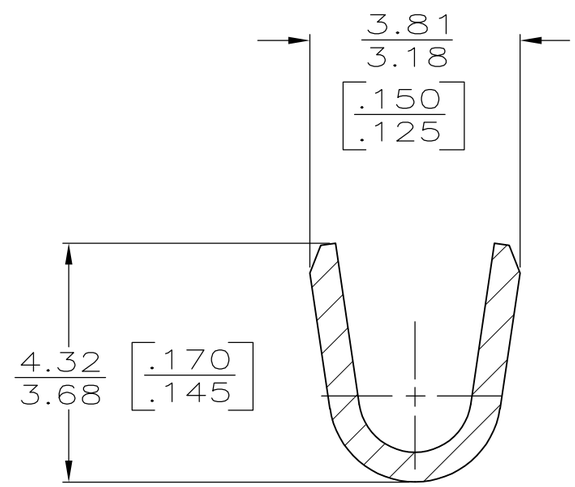

SECTION A-A
SCALE 10:1

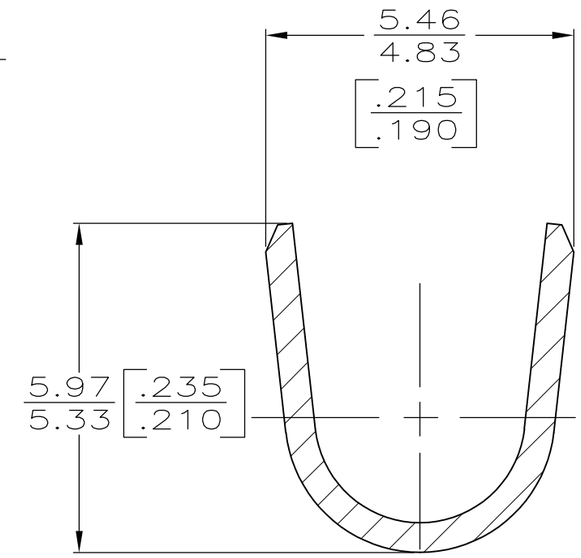

SECTION B-B
SCALE 10:1

-	3.05-4.32 DIA [.120-.170]	0.8-2.0mm [18-14] AWG	2 41330-1
TIN PLATING	3.05-4.32 DIA [.120-.170]	0.8-2.0mm [18-14] AWG	41330
FINISH	INSULATION RANGE	WIRE RANGE	PART NO

TYPE	WIDTH	STRIP LENGTH ±0.38 [±.015]	TYPE	WIDTH	±0.051[±.002] HEIGHT	WIRE
F OR O	4.57 [.180]	4.06 [.160]	F	3.05 [.120]	2.03[.080]	2.0mm²[14]
					1.83[.072]	1.3mm²[16]
					1.70[.067]	0.8mm²[18]
INSUL BARREL CRIMP			WIRE BARREL CRIMP			

THIS DRAWING IS A CONTROLLED DOCUMENT.

DIMENSIONS: mm [INCHES]

TOLERANCES UNLESS OTHERWISE SPECIFIED:

0 PLC	± -
1 PLC	± -
2 PLC	± 0.25 [.010]
3 PLC	± -
4 PLC	± -
ANGLES	± -

MATERIAL: 082 BRASS

FINISH: SEE TABLE

DWN	P FORTNEY	7/22/91
CHK	MS FEHER	8/8/91
APVD	G YETTER	8/12/91
PRODUCT SPEC	—	
APPLICATION SPEC	—	
WEIGHT	—	

Tyco Electronics

Tyco Electronics Corporation
Harrisburg, PA 17105-3608

NAME: RING

SIZE	CAGE CODE	DRAWING NO	RESTRICTED TO
A3	00779	C-41330	—

CUSTOMER DRAWING | SCALE 5:1 | SHEET 1 OF 1 | REV P

1470-19 (1/08)