THIS DRAWING IS UNPUBLISHED. RELEASED FOR PUBLICATION -,- .
© COPYRIGHT - By - ALL RIGHTS RESERVED.

LOC	DIST
G	86

REVISIONS

P	LTR	DESCRIPTION	DATE	DWN	APVD
	L5	REVISED PER ECO-11-004587	11MAR11	RK	HMR

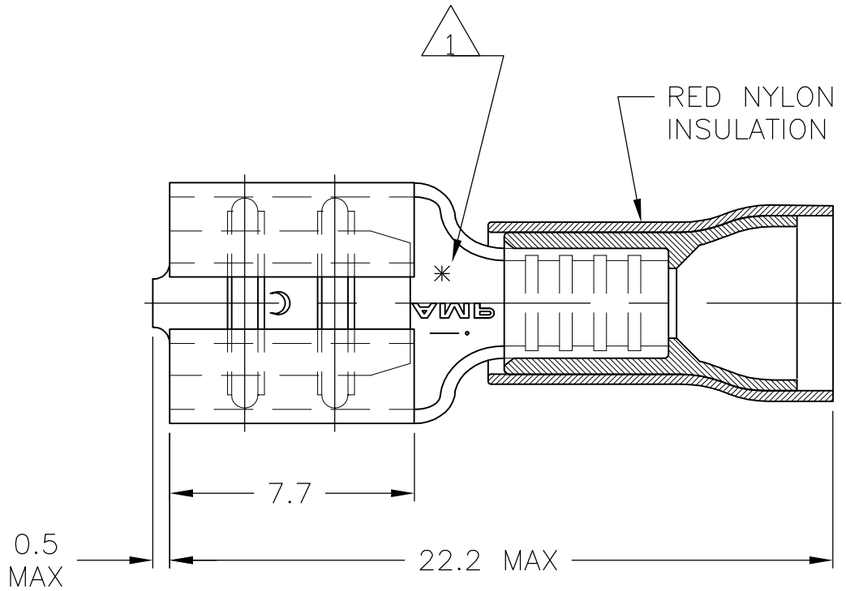

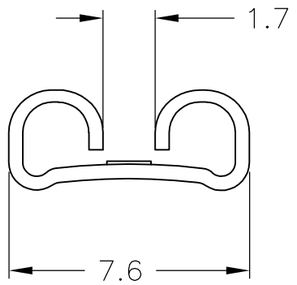

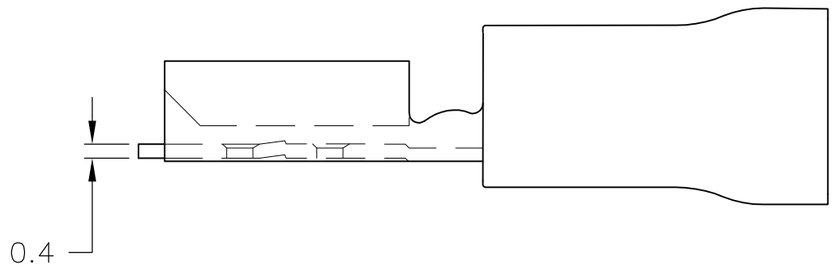

1. ASTERISK * FOR PHOS BRONZE VERSION ONLY.
2. WIRE RANGE: 0,3-1,5mm²
3. INSULATION RANGE: 3,5mm MAX DIA.
4. MATING TAB THK IS 0,8
5. SUPERSEDED BY 9-160583-5
6. SUPERSEDED BY 9-160583-6
7. SUPERSEDED BY 5-160583-2
8. SUPERSEDED BY 5-160583-5

PACKAGE TYPE	FINISH	MATERIAL	PART NO.
TAPE MOUNTED	GOLD PLATED	1 PHOS. BRONZE	5-160583-7 8
	SILVER PLATED	1 PHOS. BRONZE	5-160583-6 8
	TIN PLATED	1 PHOS. BRONZE	5-160583-5
	GOLD PLATED	BRASS	5-160583-4 7
	SILVER PLATED	BRASS	5-160583-3 7
	TIN PLATED	BRASS	5-160583-2
LOOSE PIECE	TIN-LEAD	1 PHOS. BRONZE	9-160583-8 5
	GOLD PLATED	1 PHOS. BRONZE	9-160583-7 6
	SILVER PLATED	1 PHOS. BRONZE	9-160583-6
	TIN PLATED	1 PHOS. BRONZE	9-160583-5
	GOLD PLATED	BRASS	9-160583-4 6
	SILVER PLATED	BRASS	9-160583-3 6
	TIN PLATED	BRASS	9-160583-2

THIS DRAWING IS A CONTROLLED DOCUMENT.

DIMENSIONS: mm

TOLERANCES UNLESS OTHERWISE SPECIFIED:
0 PLC ± -
1 PLC ± -
2 PLC ± 0.38
3 PLC ± -
4 PLC ± -
ANGLES ± -

MATERIAL -
FINISH -

DWN JR RUTH 25AUG2004
CHK T MICHIELUTTI 25AUG04
APVD T MICHIELUTTI 25AUG04
PRODUCT SPEC —
APPLICATION SPEC —
WEIGHT —

TE Connectivity

NAME
RECEPTACLE, FASTON, P.I.D.G., .250 SERIES
—

SIZE	CAGE CODE	DRAWING NO	RESTRICTED TO
A3	00779	C-160583	—

CUSTOMER DRAWING | SCALE 4:1 | SHEET 1 OF 1 | REV L5