62

S

WAS P-73-6101

1. PARTS COMPLY WITH AMP SOLDERABILITY SPEC. NO. 109-11-3

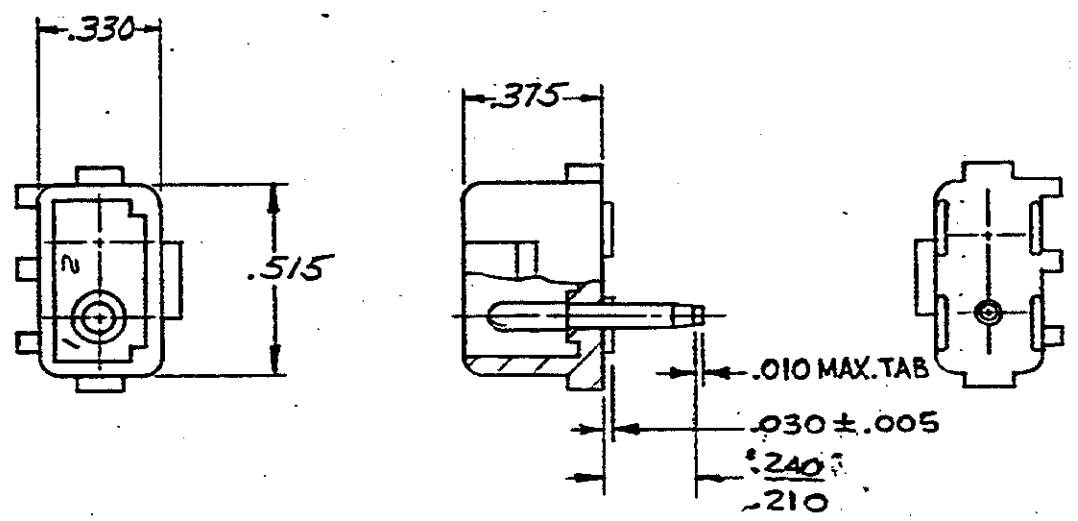

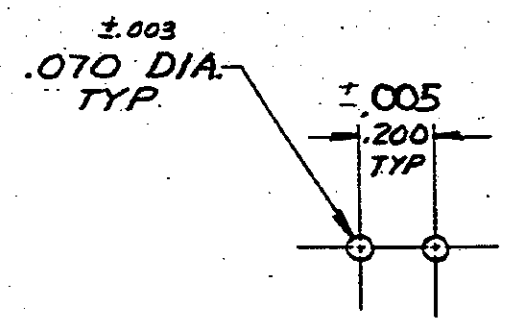

RECOMMENDED LAYOUT FOR .125 THICK P.C. BOARD

350540-1	NYLON - NATURAL	COPPER ALLOY PRE-TIN
ASSEMBLY NO.	HSG MATL & COLOR	PIN MATL & FINISH

Unpublished copy not to be reproduced nor published without written permission of AMP Incorporated

© 1973 BY AMP INCORPORATED. ALL RIGHTS RESERVED. AMP PRODUCTS COVERED BY PATENTS AND/OR PATENTS PENDING.

CUSTOMER COPY REFERENCE ONLY

LTR	REVISION RECORD	DR	CHK	DATE
J	RESTORED	BXD	RS	4/3/85
J	REV. PER M-7375	SJ	GM	8-29-83
H	250 Coolum. .250 REF, M-7255	DMS	DH	3/11/83
G	ADDED NOTE 2, M-6694	MSF	DH	11-2-81
F	REMOVED STACKER, M-6543	MSF	DH	8-17-81
E	REV. TAIL LENGTH M-5334	MSF	DH	6-24-79
D	REVISED M-4161	MF	DH	3-2-77
C	ECN M-3871	BRH	DH	9-76
B	ECN M-3452	GT	REF	5/18/76
A	ECN M-3156	EL	DH	3/2/76

L	OBSOLETE -2	MWG	6-26-84
	PER ECN CM-2709		
K	OBSOLETE 1-1, 2-1, 3-1, 4-1, 5-1, 6-1, 7-1, 8-1, 9-1, 1-2, 2-2, 3-2, 4-2, 5-2, 6-2, 7-2, 8-2, 9-2 CM-473	KW / RS	4-18-86

NUMBER 350540

REQUIRED PER ASSEMBLY

DESCRIPTION

DR g. Eckman 3-29-73

CHK CM Pettenwadge 4/9/73

DE J. Neukle 4-10-73

APP J. Neukle 4-10-73

MATERIAL AND FINISH SEE TABLE

AMP INCORPORATED HARRISBURG, PENNA

CLASS .084 DIA. PIN

TYPE POSITIVE LOCK

WIRE — RANGE — INSULATION

TOLERANCE EXCEPT AS NOTED ±.015 ±1° 0'

SCALE —

LOC CM B NO 350540 REV L

NAME 2 CIRCUIT MATE-N-LOK P.C. BOARD HEADER

DIMENSIONS IN INCHES. DO NOT SCALE PRINT.

PRINT MSS 53

AMP 1253 REV 11/65

7 6 5 4