THIS DRAWING IS UNPUBLISHED. RELEASED FOR PUBLICATION ,19 .
© COPYRIGHT 19 BY AMP INCORPORATED. ALL RIGHTS RESERVED.

LOC	DIST
DS	

REVISIONS

P	LTR	DESCRIPTION	DATE	DWN	APVD
	O	RELEASED(P95-019)	'95 9/MAR	TD	CS
	A	REVISED(RD97-073)	'97 4/APR	YD	CS
	B	REVISED(RD98-059)	'98 11/MAR	YD	CS
	C	REVISED(RD98-081)	'98 1/APR	YD	CS
	D	REVISED(FC00-0041-99)	'99 15/APR	YD	CS
	E	REVISED(FC00-0044-01)	'01 24/APR	YD	CS
	F	REVISED(FC00-0138-02)	'02 22/NOV	YD	CS

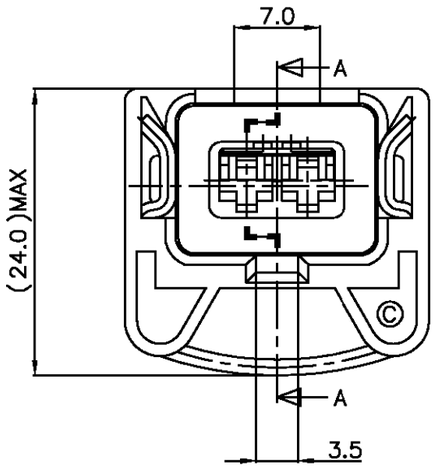

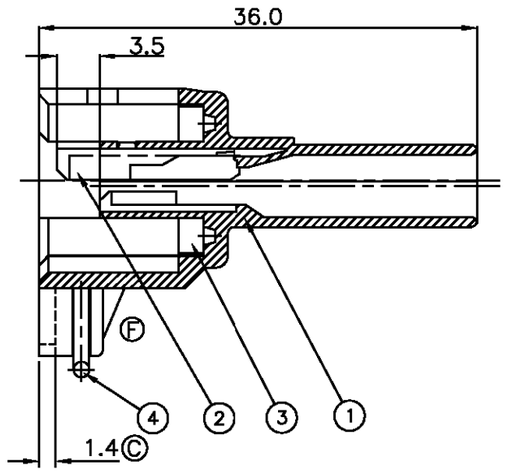

SECTION A–A

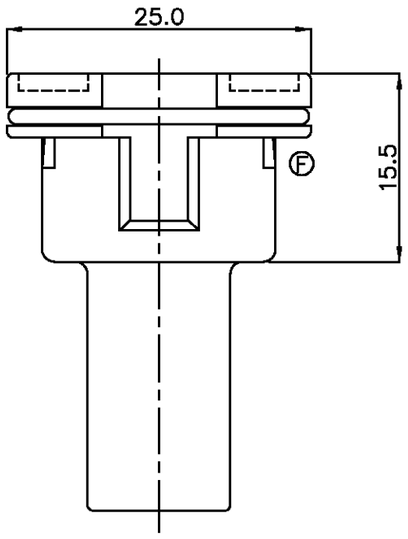

* NOTES *

1. APPLICABLE CONTACT P/NO: 927770 / 927766
2. APPLICABLE WIRE SEAL P/NO: 828904 / 828905 / 368064

	NO	P/NO	DESCRIPTION	MATERIAL	COLOR	REQUIRED Q'TY				
						DESCRIPTION	Jr POWER TIMER 2P ASS'Y	Jr POWER TIMER 2P ASS'Y	Jr POWER TIMER 2P ASS'Y	Jr POWER TIMER 2P ASS'Y	Jr POWER TIMER 2P ASS'Y
						P/NO	Ⓔ85202-5	Ⓓ85202-4	Ⓐ85202-3	Ⓐ85202-2	85202-1
	4	85387-1	SPRING	SUS 304		1	1	1	1	1
	3	85383-1	SEAL RUBBER	SILICONE	ORANGE	1	1	1	1	1
	2	85204-1	SPACER	PBT	YELLOW	1	1	1	1	1
Ⓔ	1	85203-5	JPT 2P HSG 'S' TYPE	PBT 30% GF	DARK GRAY	1				
Ⓓ	1	85203-4	JPT 2P HSG 'S' TYPE	PBT 30% GF	BROWN		1			
Ⓐ	1	85203-3	JPT 2P HSG 'S' TYPE	PBT 30% GF	GREEN			1		
Ⓐ	1	85203-2	JPT 2P HSG 'S' TYPE	PBT 30% GF	BLUE				1	
	1	85203-1	JPT 2P HSG 'S' TYPE	PBT 30% GF	BLACK					1

THIS DRAWING IS A CONTROLLED DOCUMENT FOR AMP INCORPORATED. IT IS SUBJECT TO CHANGE AND THE CONTROLLING ENGINEERING ORGANIZATION SHOULD BE CONTACTED FOR THE LATEST REVISION.

DIMENSIONS: MM

TOLERANCES UNLESS OTHERWISE SPECIFIED:
0<XX<10 ± 0.2
10<XX<30 ± 0.25
30<XX<100 ± 0.3
ANGLES ± 3°

3rd ANGLE PROJECTION

MATERIAL

FINISH

DWN

CHK

APVD

PRODUCT SPEC 108-61000

APPLICATION SPEC 114-18018

WEIGHT 4.70g

AMP

AMP KOREA.
kyungsan, korea

NAME
JPT 2P HSG ASS'Y(STANDARD)

SIZE A3 | CAGE CODE 00779 | DRAWING NO C- 8 5 2 0 2

SCALE 2/1 | SHEET 1 OF 1 | REV F