CONVERSION CHART	
INCH	MM
.002	0.05
.010	0.25
.015	0.38
.020	0.51
.030	0.76
.043	1.09
.100	2.54
.137	3.48
.150	3.81
.172	4.37
.186	4.72
.198	5.03
.200	5.08
.206	5.23
.207	5.26
.216	5.49
.236	5.99
.320	8.13
.325	8.26
.370	9.40
.525	13.34

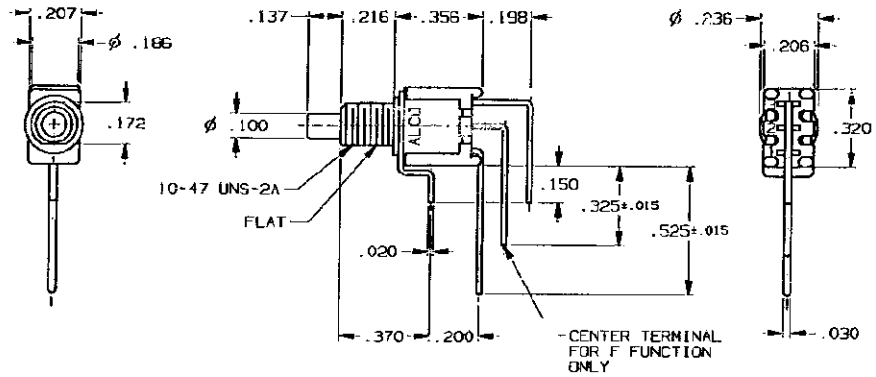

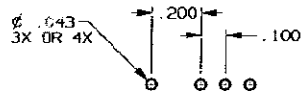

RECOMMENDED HOLE LAYOUT

TOLERANCE ±.002 UNLESS OTHERWISE NOTED

SPECIFICATIONS:

MATERIALS:
CASE: HIGH TEMPERATURE POLYESTER.
ACTUATOR BUTTON: POLYAMIDE, COLOR: SEE CHART BELOW.
MOVING CONTACT: COPPER ALLOY, GOLD PLATE.
FIXED CONTACT/TERMINAL: COPPER ALLOY, TIN/LEAD PLATE.
TERMINAL SEAL: EPOXY.

ELECTRICAL:
CONTACT RATING: 0.4 VA MAX. @ 20 VDC OR PEAK AC.
INITIAL CONTACT RESISTANCE: 20 MILLIOHMS MAX.
INSULATION RESISTANCE: 1,000 MEGOHMS @ 500 VDC MIN.
DIELECTRIC STRENGTH: 1,000 VOLTS RMS @ SEA LEVEL.
LIFE EXPECTANCY: 100,000 CYCLES.

MECHANICAL:
ACTUATION FORCE: 50 TO 400 GRAMS.
ACTUATION TRAVEL: .030".

ENVIRONMENTAL:
OPERATING TEMPERATURE: -22°F TO +149°F (-30°C TO +65°C).
STORAGE TEMPERATURE: -22°F TO +149°F (-30°C TO +65°C).

NOTES:

1. INTERPRET DRAWING PER ANSI Y14.5M-1982.

(*)	ACTUATOR BUTTON COLORS
(0)	BLACK
(2)	RED
(6)	BLUE

TERMNALS CONNECTED WHEN BUTTON IS IN POSITIONS SHOWN.

FUNCTION CODE	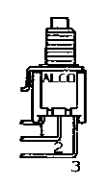	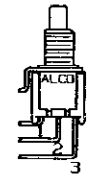
C	(1-3)	OFF
F	(2-3)	2-1

( )- INDICATES A MOMENTARY CIRCUIT

NOTE:

TERMINAL DESIGNATION NUMBERS ARE FOR REFERENCE ONLY AND DO NOT APPEAR ON SWITCHES.

OUTLINE DRAWING

SPECIFICATIONS ARE SUBJECT TO CHANGES WITHOUT NOTICE

THIRD ANGLE PROJECTION

TOLERANCES (EXCEPT AS NOTED)
ANGULAR = ±1°
DECIMAL .XX = ±
DECIMAL .XXX = ±.010
DECIMAL .XXXX = ±

AUGAT CONFIDENTIAL
This document contains information which is the exclusive property of Augat Inc. Distribution, reproduction or use by others is not permitted without the expressed written consent of Augat

UNLESS OTHERWISE SPECIFIED DIMENSIONS ARE IN INCHES DO NOT SCALE PRINT

FILE NAME: 4030-4OUT | DIRECTORY: TINSWTCH | PROJECT: .

MATERIAL: SEE SPECIFICATIONS

FINISH: SEE SPECIFICATIONS

ORIGINAL DATE OF DRAWING: 10-2-96

DRAWN: S.KIRCORIAN | DATE: 10-2-96

CHECKED: | DATE:

APPROVED: | DATE:

CODE IDENT. NO.: 91506 | DWG. SIZE: C

TYCO ELECTRONICS

TITLE: OUTLINE DRAWING
PUSHBUTTON SWITCH
TPC11*GVRA(*)

DWG. NO. 1-1437572-9 | REV. A

PRODUCT CODE: BS1

REV	REVISIONS
A	PER OG3C-0173-02 APD-MZ 03OCT02