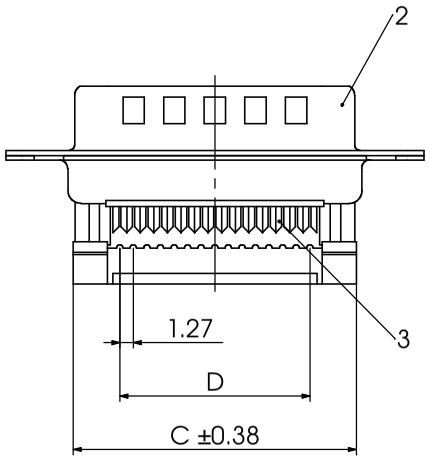

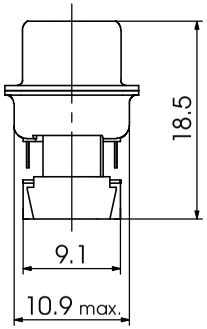

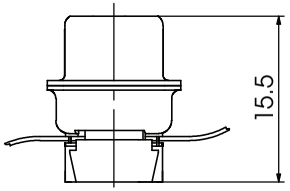

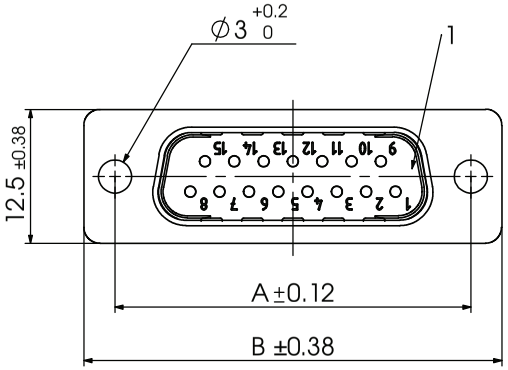

Fxx*1)P15-K49

e.g. F37P15-K49

*1) xx No. of contacts 09, 15, 25 or 37

xx	A (mm)	B (mm)	C (mm)	D (mm)
09	25	30,8	18,5	10,16
15	33,3	39,1	26,8	17,78
25	47	53	40,7	30,48
37	63,5	69,3	56,9	45,72

No.	St.	Part	Type Description/Material	Surface plating/Colour/Class
3	xx	Signal contact	P15 / Brass	0,2µm Au / IDC AWG28
2	1	Shell	Steel	tin plated, without stamp
1	1	Insulator	PBT (-55°C - 130°C)	black

Measurement without tolerance acc. to ISO 2768-m

SCALE 2:1

TITLE D-Sub-IDC-Ribbon-Connector

	NAME / DATE
DRAWN	sschref 08-10-2008
CHECKED	birgit.rinder 10-10-2008

FCT group fctgroup.com

DWG.NO. FxxP15-K49

REV. 1

REV.	DATE	CH.-NO.
1		

ORIGINAL: DIN A3-DRAWING AS A FILE

REPLACEMENT FOR: FxxP15-K49 a

PAGES 1

COMMENT:
ALL RIGHTS ARE RESERVED BY US FOR THIS DRAWING, WITHOUT OUR PRIOR CONSENT,
IT MAY NEITHER BE DUBLICATED NOR MADE AVAILABLE TO A THIRD PARTY,
AND IT ALSO MAY NOT BE IMPROPERLY USED BY TE RECEIVER, OR A THIRD PARTY.