THIS DRAWING IS UNPUBLISHED. RELEASED FOR PUBLICATION 2005
© COPYRIGHT 2005 - ALL RIGHTS RESERVED.

LOC	DIST
AL	2

REVISIONS

P	LTR	DESCRIPTION	DATE	DWN	APVD
	J5	REVISED PER ECR-16-008286	25JUL2016	BW	RS

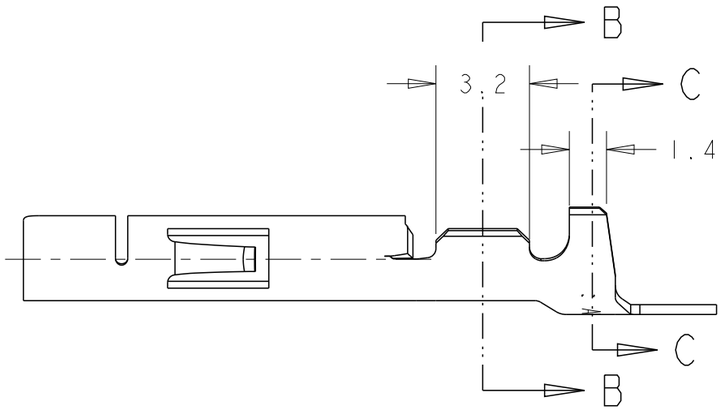

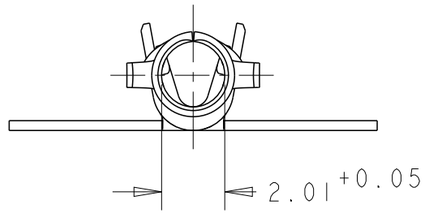

B - B

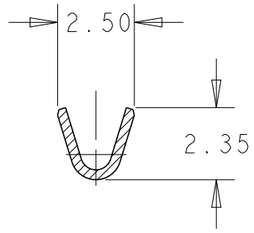

C - C

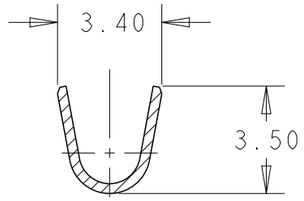

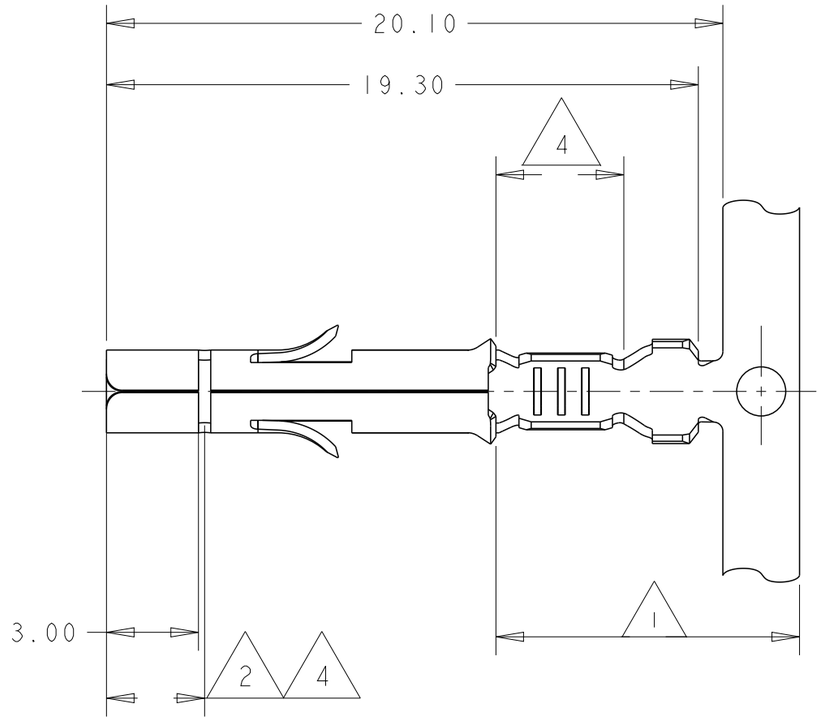

NOTES:
Bemerkungen:

1. 2-6µm Sn OVER Ni IN CRIMP-AREA
   2-6µm Sn über Ni in der Crimpzone
2. 0.8µm Au OVER Ni IN CONTACT-AREA
   0.8µm Au über Ni in der Kontaktzone
3. SUITABLE FOR Ø1.0-2.5mm
   Für Isolations Ø1.0-2.5mm geeignet
4. 0.8µm Au OVER 1.3µm Ni ON INSIDE OF WIRE BARREL AND CONTACT AREA
   0.8µm Au über 1.3µm Ni in der Drahtcrimp und Kontaktzonen, sonst 1.3µm Ni

	LOOSE PIECE	PART NO.	MATERIAL	FINISH
SUPERSEDED BY 350851-7	~~926895-7~~	~~926884-7~~	~~BRASS~~	~~1 2~~
SUPERSEDED BY 350851-7	~~926895-6~~	~~926884-6~~	~~PHOS BRONZE~~	~~1 2~~
	926895-3	926884-3	PHOS BRONZE	PRE-TIN
OBSOLETED	~~926895-2~~	~~926884-2~~	~~BRASS~~	~~4~~
	926895-1	926884-1	BRASS	PRE-TIN

THIS DRAWING IS A CONTROLLED DOCUMENT.

DIMENSIONS: mm

TOLERANCES UNLESS OTHERWISE SPECIFIED:
0 PLC ±0.2
1 PLC ±0.2
2 PLC ±0.2
3 PLC ±-
4 PLC ±-
ANGLES ±1°

MATERIAL SEE TABLE
FINISH SEE TABLE

DWN J.Skoda 07NOV2005
CHK R.Vlcek -
APVD -
PRODUCT SPEC 108-1031
APPLICATION SPEC 114-18011
WEIGHT -

TE Connectivity

NAME
UNIVERSAL MNL SOCKET
0.2-0.8 mm2 WIRE RANGE
-

SIZE	CAGE CODE	DRAWING NO	RESTRICTED TO
A3	00779	C-926884	-

CUSTOMER DRAWING | SCALE 5:1 | SHEET 1 OF 1 | REV J5

1470-19 (3/11)