THIS DRAWING IS UNPUBLISHED. RELEASED FOR PUBLICATION -,- .
© COPYRIGHT - By - ALL RIGHTS RESERVED.

LOC	DIST
GP	00

REVISIONS

P	LTR	DESCRIPTION	DATE	DWN	APVD
	V2	REVISED PER ECO-11-004835	11MAR11	RK	HMR

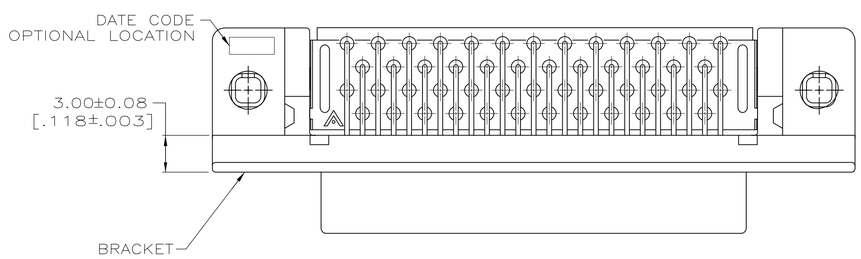

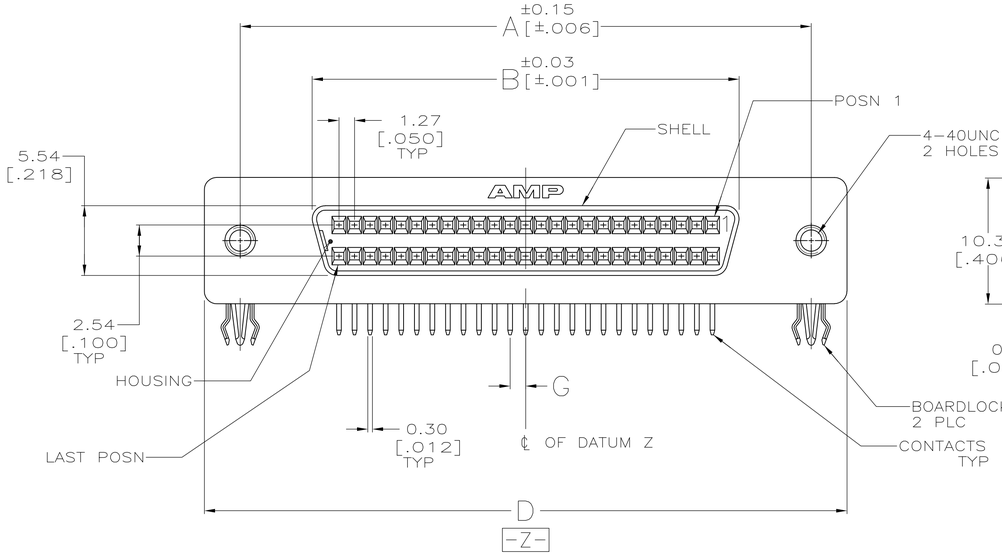

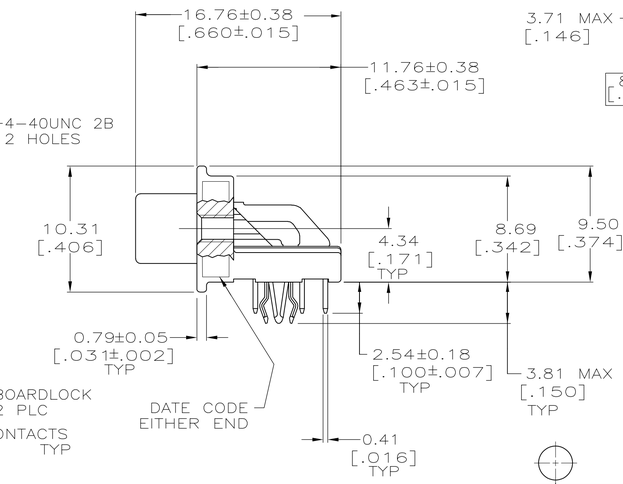

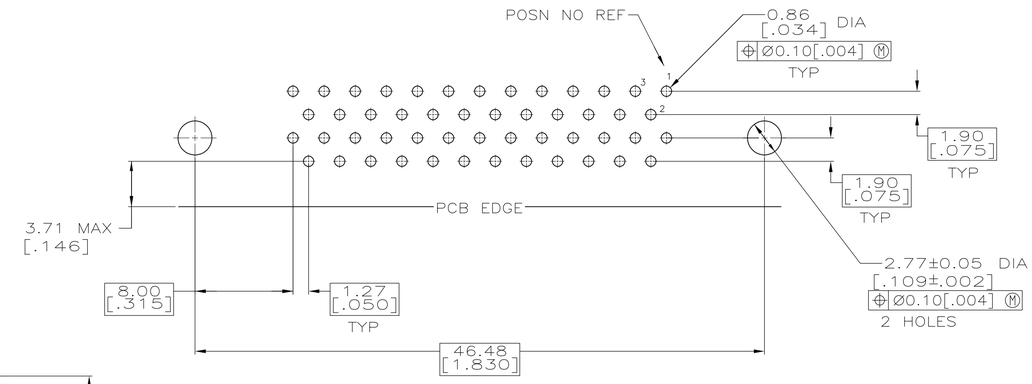

P.C.BOARD MOUNTING DIMENSIONS
CONNECTOR SIDE
P.C.BOARD THICKNESS 1.57±0.20 [.062±.008]
PC BOARD PATTERN S

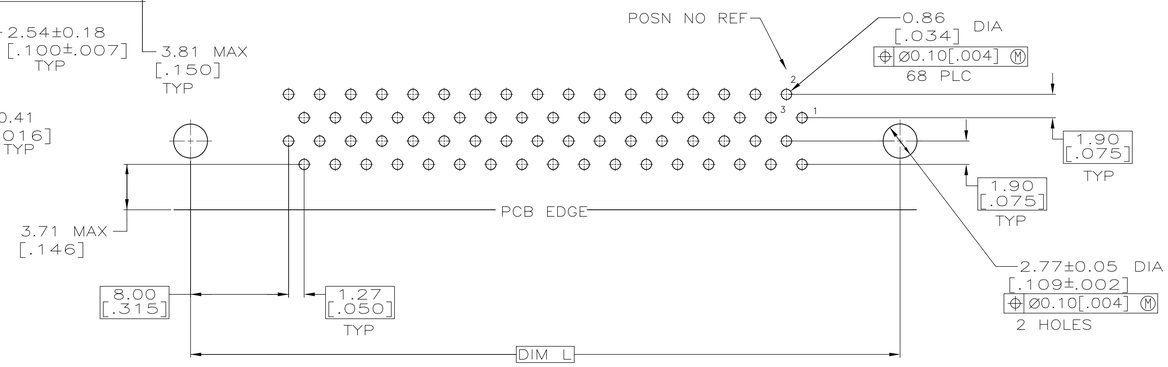

P.C.BOARD MOUNTING DIMENSIONS
CONNECTOR SIDE
P.C.BOARD THICKNESS 1.57±0.20 [.062±.008]
PC BOARD PATTERN T

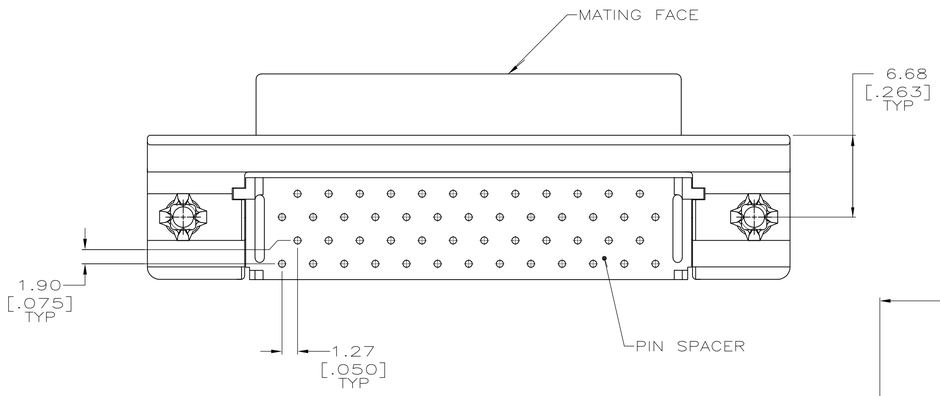

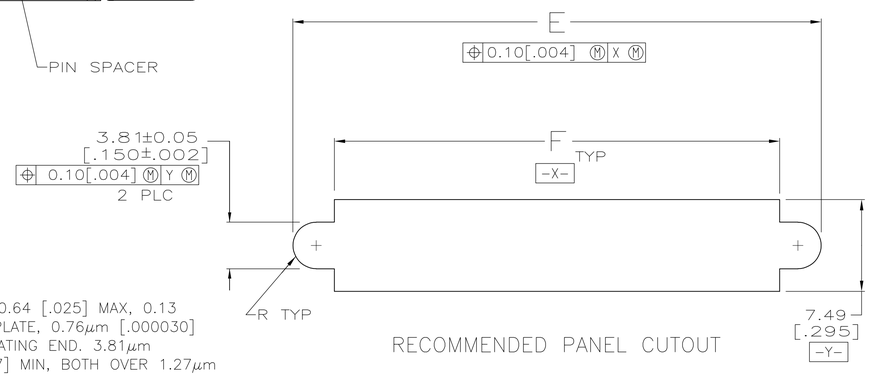

RECOMMENDED PANEL CUTOUT

PC BOARD PATTERN	BOARDLOCK FINISH	L	G	F	E	D	B	A	NO OF POSN	PART NUMBER
T	4	57.91 [2.280]	0.64 [.025]	49.12 [1.934]	61.72 [2.430]	63.88 [2.515]	46.13 [1.816]	57.91 [2.280]	68	~~1 787170-0~~ 5
T	3	78.23 [3.080]	0.64 [.025]	69.44 [2.734]	82.04 [3.230]	84.20 [3.315]	66.45 [2.616]	78.23 [3.080]	100	787170-9
T	3	57.91 [2.280]	0.64 [.025]	49.12 [1.934]	61.72 [2.430]	63.88 [2.515]	46.13 [1.816]	57.91 [2.280]	68	787170-7
S	3	–	1.27 [.050]	37.69 [1.484]	50.29 [1.980]	52.45 [2.065]	34.70 [1.366]	46.48 [1.830]	50	787170-5
T	3	40.13 [1.580]	0.64 [.025]	36.78 [1.448]	43.56 [1.715]	46.10 [1.815]	28.35 [1.116]	40.13 [1.580]	40	787170-4

1 MATERIAL
CONTACTS: PHOSPHOR BRONZE
HOUSING & PIN SPACER: UL 94V-O RATED, THERMOPLASTIC, BLACK
BRACKET: ZINC
SHELL: CARBON STEEL
BOARDLOCKS: COPPER ALLOY.

2 FINISH
CONTACTS: EITHER 0.76μm [.000030] MIN GOLD PLATE FOR A LENGTH OF 0.64 [.025] MAX, 0.13 [.005] MIN FROM MATING END OR GOLD FLASH OVER PALLADIUM NICKEL PLATE, 0.76μm [.000030] MIN TOTAL FOR A LENGTH OF 0.64 [.025] MAX, 0.13 [.005] MIN FROM MATING END. 3.81μm [.000150] MIN TIN-LEAD ON OPPOSITE END FOR A LENGTH OF 2.72 [.107] MIN, BOTH OVER 1.27μm [.000050] MIN NICKEL.
SHELL: 5.08μm [.000200] MIN NICKEL OVER 1.27μm [.000050] MIN COPPER.
BRACKET: 2.54μm [.000100] MIN NICKEL OVER 5.08μm [.000200] COPPER.

3 5.08μm [.000200] MIN TIN-LEAD OVER 1.27μm [.000050] MIN NICKEL.

4 3.00μm [.000118] MIN TIN OVER 1.27μm [.000050] MIN NICKEL.

5 OBSOLETE PARTS: OBSOLETE CIS STREAMLINING PER D.RENAUD/D.SINISI

THIS DRAWING IS A CONTROLLED DOCUMENT.

DIMENSIONS: mm [INCHES]

TOLERANCES UNLESS OTHERWISE SPECIFIED:
0 PLC ± –
1 PLC ± –
2 PLC ± 0.13 [.005]
3 PLC ± –
4 PLC ± –
ANGLES ± –

MATERIAL 1 FINISH 2

DWN B. MCMASTER 26FEB04
CHK S. SHUEY 26FEB04
APVD M. WALMSLEY 26FEB04
PRODUCT SPEC 108-1228
APPLICATION SPEC 114-40029
WEIGHT –
CUSTOMER DRAWING

TE Connectivity

NAME RECEPTACLE ASSEMBLY, SHIELDED, RIGHT ANGLE, .050 SERIES, AMPLIMITE

SIZE	CAGE CODE	DRAWING NO	RESTRICTED TO
A1	00779	C-787170	–

SCALE 4:1 SHEET 1 OF 1 REV V2

4805 (3/11)