THIS DRAWING IS UNPUBLISHED. RELEASED FOR PUBLICATION .19 .
© COPYRIGHT 19 BY AMP INCORPORATED. ALL RIGHTS RESERVED.

LOC	DIST
CE	00

REVISIONS

P	LTR	DESCRIPTION	DATE	DWN	APVD
	A	REV PER 0B60-0031-01	04JUN2001	BB	DK
	B	REVISE PER 0A00-0138-01	13AUG2001	BB	DK
	C	REVISE PER ECR-06-014872	20JUN2006	BB	DK

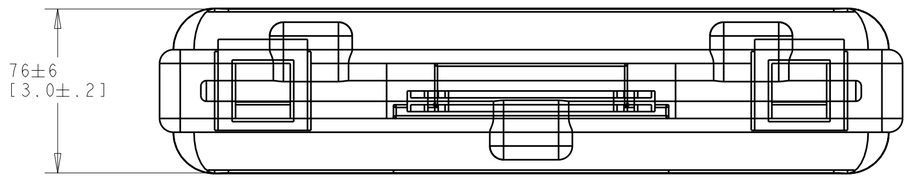

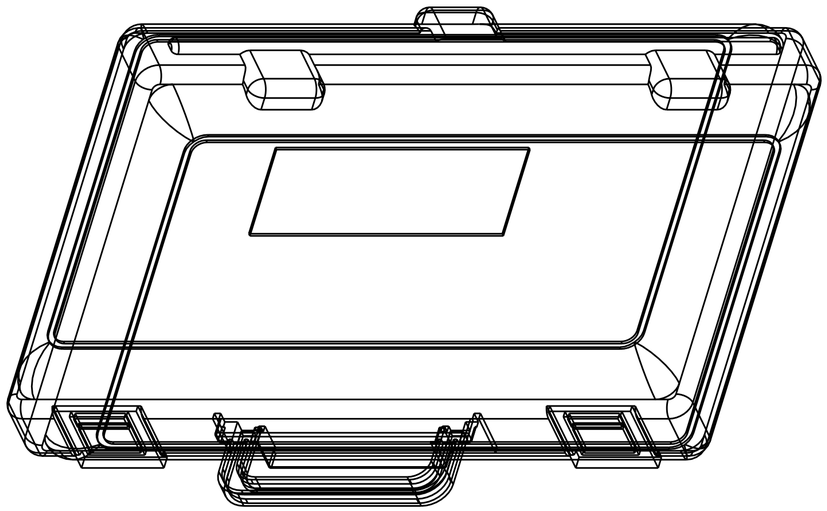

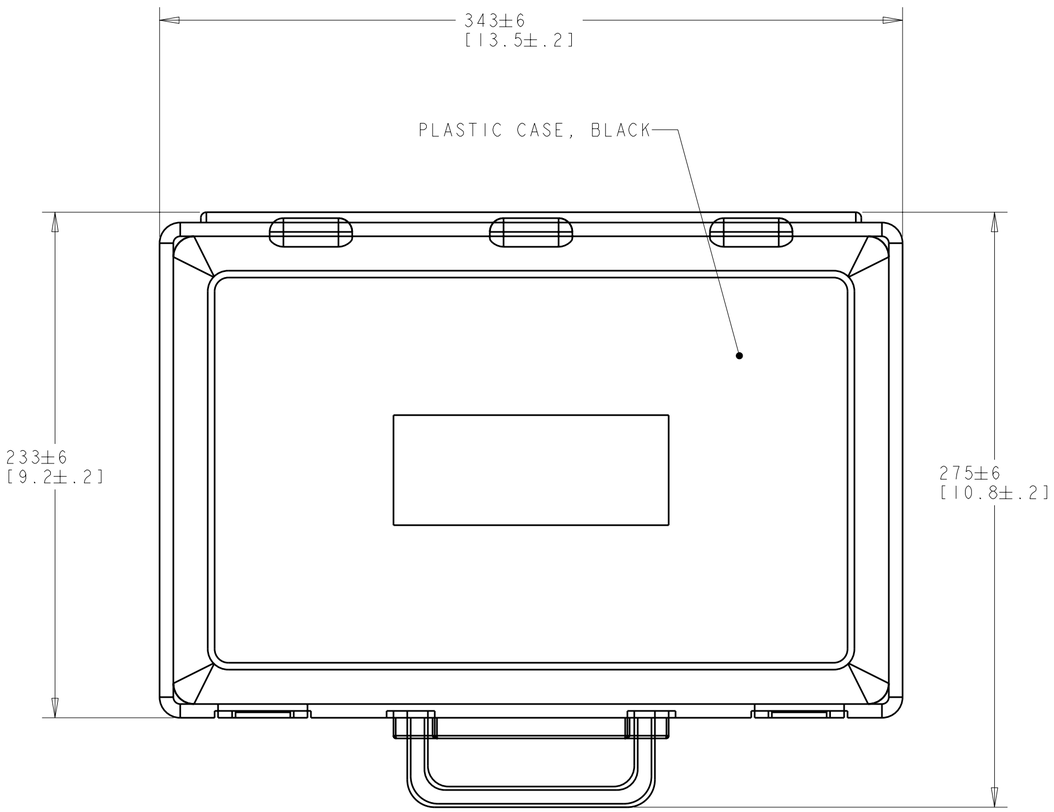

1. 1278863-1 INCLUDES MT-RJ ADAPTER (1),
   MT-RJ TO SC SIMPLEX CABLE ASSEMBLY (2),
   MT-RJ (PINS) TO SC SIMPLEX CABLE ASSEMBLY (1),
   AND MT-RJ TO MT-RJ CABLE ASSEMBLY (1).

2. 1278863-2 INCLUDES MT-RJ ADAPTER (1),
   MT-RJ TO ST SIMPLEX CABLE ASSEMBLY (2),
   MT-RJ (PINS) TO ST SIMPLEX CABLE ASSEMBLY (1),
   AND MT-RJ TO MT-RJ CABLE ASSEMBLY (1).

3. 1278863-3 INCLUDES
   MT-RJ TO MT-RJ CABLE ASSEMBLY (2),

4. 1278863-4 INCLUDES MT-RJ ADAPTER (1),}
   MT-RJ (SECURE HOUSING) TO SC SIMPLEX CABLE ASSEMBLY (2),
   MT-RJ (PINS) TO SC SIMPLEX CABLE ASSEMBLY (1),
   AND MT-RJ (SECURE HOUSING) TO MT-RJ CABLE ASSEMBLY (1).

5. 1278863-5 INCLUDES MT-RJ ADAPTER (1),
   MT-RJ (SECURE HOUSING) TO ST SIMPLEX CABLE ASSEMBLY (2),
   MT-RJ (PINS) TO ST SIMPLEX CABLE ASSEMBLY (1),
   AND MT-RJ (SECURE HOUSING) TO MT-RJ CABLE ASSEMBLY (1).

6. 1278863-6 INCLUDES
   MT-RJ (SECURE HOUSING) TO MT-RJ CABLE ASSEMBLY (2),

TEST EQUIPTMENT CONNECTION	PART NUMBER
MT-RJ	1278863-6
ST SIMPLEX	1278863-5
SC SIMPLEX	1278863-4
MT-RJ	1278863-3
ST SIMPLEX	1278863-2
SC SIMPLEX	1278863-1

THIS DRAWING IS A CONTROLLED DOCUMENT FOR AMP INCORPORATED. IT IS SUBJECT TO CHANGE AND THE CONTROLLING ENGINEERING ORGANIZATION SHOULD BE CONTACTED FOR THE LATEST REVISION.

DIMENSIONS: mm [INCHES]

TOLERANCES UNLESS OTHERWISE SPECIFIED:
0 PLC ±-
1 PLC ±-
2 PLC ±-
3 PLC ±-
4 PLC ±-
ANGLES ±-

MATERIAL -
FINISH -

DWN D.PULEO 22SEP99
CHK R.GALLAGHER 22SEP99
APVD R.EDWARDS 22SEP99
PRODUCT SPEC -
APPLICATION SPEC -
WEIGHT -

AMP Incorporated
Harrisburg, PA 17105-3608

NAME MT-RJ TEST CABLE KIT, SINGLEMODE
-

SIZE	CAGE CODE	DRAWING NO
A2	00779	C-1278863

CUSTOMER DRAWING

SCALE NTS SHEET 1 OF 1 REV C

AMP 1471-9 REV 09MAY94

Pro/ENGINEER DRAWING