Axial Leads/SpinGuard®

GENERAL DESCRIPTION

AVX SA Series
Conformally Coated Axial Leaded MLC

Temperature Coefficients: C0G (NP0), X7R, X5R, Z5U
10, 50, 100, 200 Volts

Case Material: Epoxy (Flame Retardant to UL Bulletin 492, Par. 280)

Lead Material: Solderable

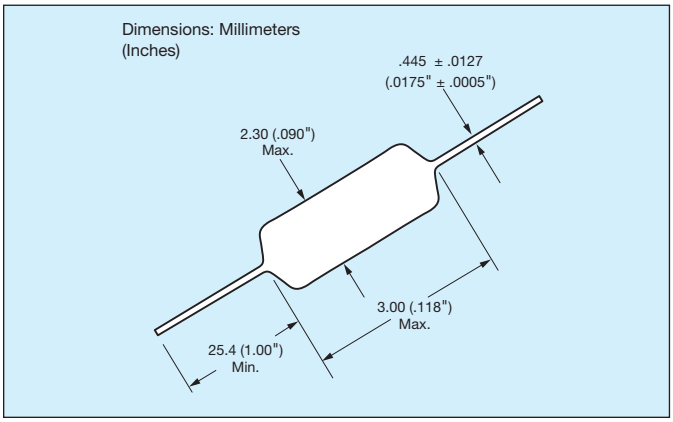

HOW TO ORDER

SA10 — **Conformal Axial Size**
SA05
SA10
SA11
SA20
SA30
SA40

5 — **Voltage**
Z = 10V
5 = 50V
1 = 100V
2 = 200V

E — **Dielectric**
A = C0G (NP0)
C = X7R
D = X5R
E = Z5U

104 — **Capacitance**
First two digits are the significant figures of capacitance. Third digit indicates the additional number of zeros. For example, order 100,000 pF as 104. (For values below 10pF use "R" in place of decimal point, e.g., 1R4 = 1.4pF.)

Z — **Capacitance Tolerance**
C0G (NP0):
C = ±.25pF
D = ±.5pF
F = ±1%
G = ±2%
J = ±5%
K = ±10%

X7R:
J = ±5%
K = ±10%
M = ±20%

X5R:
K = ±10%
M = ±20%

Z5U:
M = ±20%
Z = +80%
-20%

A — **Failure Rate**
A = Not Applicable

R — **Leads**
Standard (Solderable)
R = RoHS Compliant
A = Standard Solderable

MARKING (EXAMPLE)

SpinGuard marking includes full date code/lot code identification. A first in the industry, this format provides complete traceability to all manufacturing processes involving the basic chip and final assembly. Total Shipment traceability is also provided.

SA05

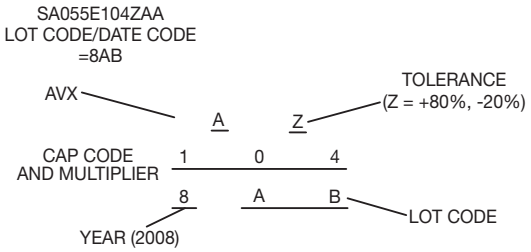

SA10, 11, 20, 30, 40

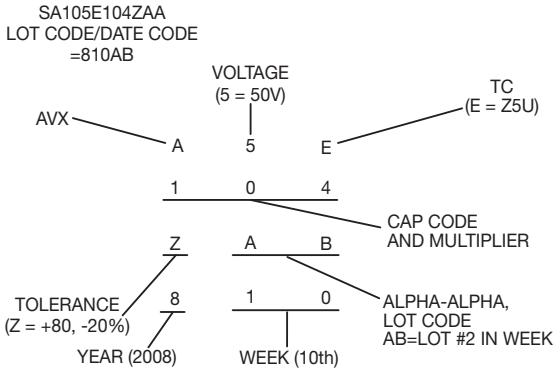

PACKAGING REQUIREMENTS

A = Standard Reels (see Page 48)
B = 1000 piece reels (distributors only, tight tolerance only)
C = Ammo Pack (see Page 48)
D thru J = See Special Lead Configurations (Page 41)
M = 26mm tape and reel
N = 26mm ammo pack
R = RoHS, Standard reels (See page 48)

Axial Leads/SpinGuard®

C0G (NP0) Dielectric

SIZE AND CAPACITANCE SPECIFICATIONS

Dimensions: Millimeters (Inches)

	AVX Style	SA05		SA10			SA11		SA20		SA30		SA40	
	Length (L)	3.00 (.118")		4.32 (.170")			4.32 (.170")		6.60 (.260")		7.37 (.290")		10.16 (.400")	
	Diameter (D)	2.30 (.090")		2.54 (.100")			3.05 (.120")		2.54 (.100")		3.81 (.150")		3.81 (.150")	
	Lead Diameter	.445 (.0175")		.445 (.0175")			.445 (.0175")		.445 (.0175")		.445 (.0175")		.445 (.0175")	
	Lead Length	25.4 (1.00")		25.4 (1.00")			25.4 (1.00")		25.4 (1.00")		25.4 (1.00")		25.4 (1.00")	
Cap. in pF	Typical AVX Part Nos.	WVDC 200	100	WVDC 200	100	50	WVDC 100	50	WVDC 100	50	WVDC 100	50	WVDC 100	50
1.0* ↓ 9.1*	SA102A1R0DAR ↓ SA102A9R1DAR													
10	SA102A100JAR													
12	SA102A120JAR													
15	SA102A150JAR													
18	SA102A180JAR													
22	SA102A220JAR													
27	SA102A270JAR													
33	SA102A330JAR													
39	SA102A390JAR													
47	SA102A470JAR													
56	SA102A560JAR													
68	SA102A680JAR													
82	SA102A820JAR													
100	**SA102A101JAR**													
120	SA102A121JAR													
150	SA101A151JAR													
180	SA101A181JAR													
220	SA101A221JAR													
270	SA101A271JAR													
330	SA101A331JAR													
390	SA101A391JAR													
470	SA101A471JAR													
560	SA101A561JAR													
680	SA101A681JAR													
820	SA101A821JAR													
1000	**SA105A102JAR**													
1200	SA201A122JAR													
1500	SA201A152JAR													
1800	SA205A182JAR													
2200	**SA301A222JAR**													
2700	SA301A272JAR													
3300	SA301A332JAR													
3900	SA301A392JAR													
4700	**SA305A472JAR**													
5600	SA401A562JAR													
6800	SA401A682JAR													
8200	SA405A822JAR													
10,000	**SA405A103JAR**													
12,000	SA405A123JAR													

For other tolerances see Part No. Codes
For other voltages see Part No. Codes
AVX Style

= Industry preferred values

*"C&D" Tolerance Only

Axial Leads/SpinGuard®

X7R Dielectric

SIZE AND CAPACITANCE SPECIFICATIONS

Dimensions: Millimeters (Inches)

	AVX Style	SA05			SA10			SA11		SA20		SA30		SA40	
	Length (L)	3.00 (.118")			4.32 (.170")			4.32 (.170")		6.60 (.260")		7.37 (.290")		10.16 (.400")	
	Diameter (D)	2.30 (.090")			2.54 (.100")			3.05 (.120")		2.54 (.100")		3.81 (.150")		3.81 (.150")	
	Lead Diameter	.445 (.0175")			.445 (.0175")			.445 (.0175")		.445 (.0175")		.445 (.0175")		.445 (.0175")	
	Lead Length	25.4 (1.00")			25.4 (1.00")			25.4 (1.00")		25.4 (1.00")		25.4 (1.00")		25.4 (1.00")	
Cap. in pF	Typical AVX Part Nos.	WVDC 200	100	50	WVDC 200	100	50	WVDC 100	50	WVDC 100	50	WVDC 100	50	WVDC 100	50
220	SA102C221KAR														
270	SA102C271KAR														
330	SA102C331KAR														
390	SA102C391KAR														
470	SA102C471KAR														
560	SA101C561KAR														
680	SA101C681KAR														
820	SA101C821KAR														
1000	SA101C102KAR														
1200	SA101C122KAR														
1500	SA101C152KAR														
1800	SA101C182KAR														
2200	SA101C222KAR														
2700	SA101C272KAR														
3300	SA101C332KAR														
3900	SA101C392KAR														
4700	SA101C472KAR														
5600	SA101C562KAR														
6800	SA101C682KAR														
8200	SA105C822KAR														
10,000	**SA105C103KAR**														
12,000	SA105C123KAR														
15,000	SA105C153KAR														
18,000	SA105C183KAR														
22,000	SA105C223KAR														
27,000	SA105C273KAR														
33,000	SA105C333KAR														
39,000	SA105C393KAR														
47,000	**SA105C473KAR**														
56,000	SA115C563KAR														
68,000	SA115C683KAR														
82,000	SA115C823KAR														
100,000	**SA115C104KAR**														
120,000	SA305C124KAR														
150,000	SA305C154KAR														
180,000	SA305C184KAR														
220,000	**SA305C224KAR**														
270,000	SA305C274KAR														
330,000	SA305C334KAR														
470,000	SA405C474KAR														

For other tolerances see Part No. Codes
For other voltages see Part No. Codes
AVX Style

= Industry preferred values

Axial Leads/SpinGuard®

Z5U Dielectric

SIZE AND CAPACITANCE SPECIFICATIONS

Dimensions: Millimeters (Inches)

	AVX Style	SA05	SA10		SA11		SA20		SA30		SA40	
	Length (L)	3.00 (.118")	4.32 (.170")		4.32 (.170")		6.60 (.260")		7.37 (.290")		10.16 (.400")	
	Diameter (D)	2.30 (.090")	2.54 (.100")		3.05 (.120")		2.54 (.100")		3.81 (.150")		3.81 (.150")	
	Lead Diameter	.445 (.0175")	.445 (.0175")		.445 (.0175")		.445 (.0175")		.445 (.0175")		.445 (.0175")	
	Lead Length	25.4 (1.00")	25.4 (1.00")		25.4 (1.00")		25.4 (1.00")		25.4 (1.00")		25.4 (1.00")	
Cap. in pF	Typical AVX Part Nos.	WVDC 50	WVDC 100	50	WVDC 100	50	WVDC 100	50	WVDC 100	50	WVDC 100	50
10,000	**SA105E103ZAR**											
15,000	SA105E153ZAR											
22,000	SA105E223ZAR											
33,000	SA105E333ZAR											
47,000	SA105E473ZAR											
68,000	SA105E683ZAR											
***100,000**	**SA105E104ZAR**											
150,000	SA105E154ZAR											
220,000	**SA105E224ZAR**											
330,000	**SA115E334ZAR**											
470,000	**SA305E474ZAR**											
680,000	SA305E684ZAR											
820,000	SA305E824ZAR											
1,000,000	**SA305E105ZAR**											

For other tolerances see Part No. Codes
For other voltages see Part No. Codes
AVX Style

= **Industry preferred values**

***Preferred Industry Decoupling Capacitor —** Insertable on .300" centers.
SA105E104ZAA

Axial Leads/SpinGuard®

X5R Dielectric

SIZE AND CAPACITANCE SPECIFICATIONS

Dimensions: Millimeters (Inches)

	AVX Style	SA10
	Length (L)	4.32 (.170")
	Diameter (D)	2.54 (.100")
	Lead Diameter	.445 (.0175")
	Lead Length	25.4 (1.00")
Cap. in µF	Typical AVX Part Nos.	WVDC 10
1.8	SA10ZD185KAR	
2.7	SA10ZD275KAR	
3.3	SA10ZD335KAR	
4.7	SA10ZD475KAR	

For other tolerances see Part No. Codes
For other voltages see Part No. Codes
AVX Style

= **Industry preferred values**

SPECIAL LEAD CONFIGURATIONS

Dimensions — Body dimensions Per Standard SpinGuard Configurations.
Formed dimensions as shown for types D, E, F, G, H, I, & J configurations.

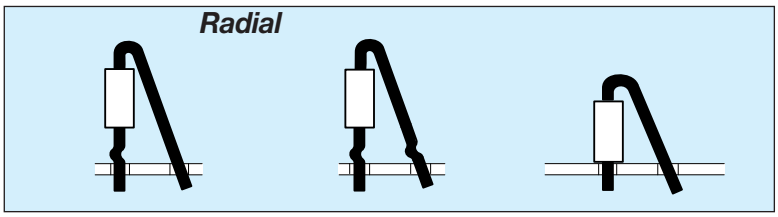

D
Single Crimp

E
Dual Crimp

F
No Crimp

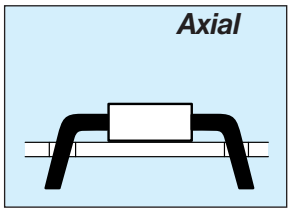

G = .300" L.S. I = .500" L.S.
H = .400" L.S. J = .600" L.S.

Formed Dimensions:

	LEAD SPACING*	SEATED HEIGHT (Max.)		
	Nom.	D & E	F	G, H, I & J
SA10	.2"	.525"	.300"	.100"
SA20	.2"	.570"	.375"	.100"
SA30	.2"	.580"	.425"	.150"
SA40	.2"	.650"	.460"	.150"

*Lead spacing can be varied by user to cover .1"-.3" spacing requirements for F, D, and E styles.

TAPE AND REEL

CLASS I / RS-296	
A.	5mm ± 0.5mm (.200" ± 0.020")
B*.	52.4mm ± 1.5mm (2.063" ± 0.059")
C.	6.35mm ± 0.4mm (0.250" ± 0.016")
D^1-D^2.	1.4mm (0.055" MAX.)
E.	1.2mm (0.047" MAX.)
F.	1.6mm (0.063" MAX.)
G.	356mm (14.00")
H.	76mm (3.000")
I.	25.4mm (1.000")
J.	84mm (3.300")
K.	70mm (2.750")

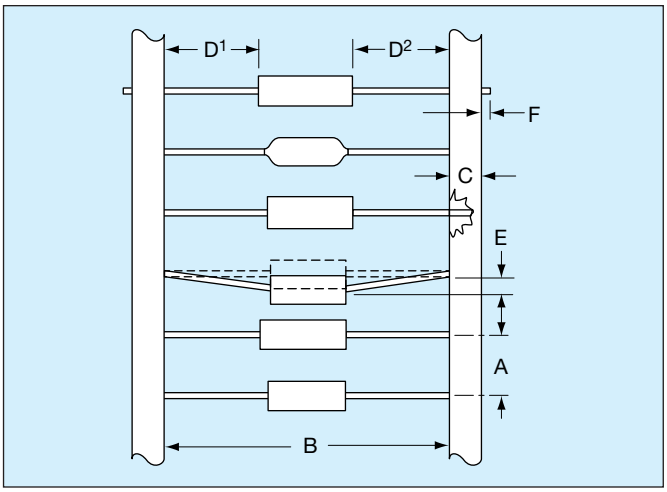

Leader Tape: 300mm min. (12")
Splicing: Tape Only
Missing Parts: 0.25% of component count max.-
No consecutive missing parts

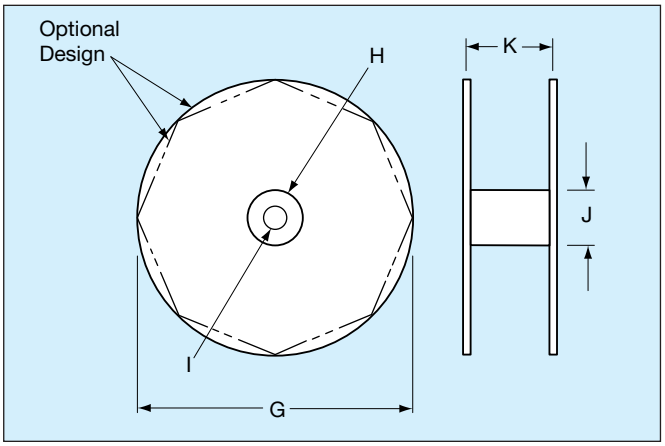

REEL QUANTITIES (MAX.) ‡

SA05	7,500 pcs.	MA10	5,000 pcs.
SA10	7,500 pcs.	MA20	5,000 pcs.
SA11	5,000 pcs.	MA30	3,000 pcs.
SA20	5,000 pcs.	MA40	3,000 pcs.
SA30	5,000 pcs.	MA50	950 pcs.
SA40	5,000 pcs.	MA60	650 pcs.

‡ 1000 pc. reels available for distribution pack only in ±1% and ±2% tolerance.

* Standard Tape Spacing Shown. Also available in 26.0mm + 1.5mm, – 0mm, (1.023 in. + .059 in. -0 in.) for SpinGuards only. EIA Class I, II and III tape spacings are available for molded axials. Tape spacing for Class II is 63.5mm ± 1.5mm (2.50 in ± .059 in), and for Class III 73mm ± 1.5mm (2.87 in ± .059 in)

ADDITIONAL PACKAGING AVAILABLE

AMMO PACK

Tape Spacing	SA05, SA10 SA20	SA11 SA30	SA40	BOX SIZES (Nominal)		
				L	W	H
52.4mm ± 1.5mm (2.062" ± .059")	4,000 pcs.	2000	2,000 pcs.	255mm (10.039")	73mm (2.874")	93mm (3.661")
26.0mm + 1.5mm - 0mm (1.023" + .059" - 0")	4,000 pcs.*	2000	2,000 pcs.*	255mm (10.039")	48mm (1.889")	113mm (4.448")

*SpinGuard only

BULK PACK (MOLDED AXIALS ONLY)

MA10 MA20 MA30 MA40	100 pcs. (bag)
MA50 MA60	50 pcs. (bag)

Mouser Electronics

Authorized Distributor

Click to View Pricing, Inventory, Delivery & Lifecycle Information:

AVX:

SA102A300JAA SA111A152JAA SA101A221JAA SA301A222JAA SA205A202FAA SA101A471KAA SA102A330KAA SA102A330JAA SA101C223KAA SA102A150JAA SA205A222FAA SA101C222MAA SA102A680JAA SA101C272KAA SA102A220KAA SA102A220JAA SA105E104MAA SA105E104ZAA SA101C222KAA SA105E333MAA SA102C471KAA SA105E104MAA-B SA101E103MAA SA305E105MAA SA105E103MAA SA101C103MAA SA405A822JAA SA102A270JAA SA102A390JAA SA102A470KAA SA101A151FAA SA102A121JAA SA101A151KAA SA101A471FAA SA102A120JAA SA102A820JAA SA102C472KAA SA105E154MAA SA305C224KAA SA105E104MAR SA101A101JAA SA101A181KAA SA101A391FAA SA101A821GAA SA101C182KAA SA101C392KAA SA101E103ZAA SA101E223MAA SA102A101JAR SA102A121KAA SA102A680KAA SA102A6R8DAA SA102C682JAA SA105C103JAR SA105C104KAR SA105C333MAA SA105E103MAR SA111A152GAA SA115C104KAR SA115E334ZAA SA201A152JAA SA301A392JAA SA305C224KAR SA405A103FAA SA105C333KAR SA102A220KAR SA101A151JAR SA101C682JAR SA102C471MAR SA102A180JAR SA101C222KAR SA101A151FAR SA105E223MAR SA102A470KAR SA101C222MAR SA102A121JAR SA102A330KAR SA102C471KAR SA101A471KAR SA105E333MAR SA105C223KAR SA101C223KAR SA102A150JAR SA102A270JAR SA102A5R1DAR SA101A331JAR SA105A102GAR SA102A300JAR SA102A470JAR SA105C473MAA SA111A222JAR SA102A220JAR SA301A272JAR SA102A180KAR SA305E474MAR SA205C333KAR SA101A301JAR SA101A471JAR SA101A151KAR SA101A471FAR