C-Series
Circuit Breaker

The C-Series hydraulic/magnetic circuit breakers are ideal for applications that require higher amperage and voltage handling capability in a smaller package. They are available in 1-6 poles, 0.02-100amps, UL Recognized up to 480VAC or 150VDC, UL489 Listed up to 240VAC or 125VDC, with choice of time delays, terminal options, actuator styles and colors.

Product Highlights:

- The UL489 C-Series employs a unique arc chute design which allows for higher interrupting capacities of up to 10,000 amps. New thermoset glass filled polyester half shell construction provides for increased mechanical and electrical strength. The wiping contacts, mechanical linkage with two step actuation, clean contacts providing high, positive contact pressure and longer contact life
- Available with American Standard or Metric Threaded Stud terminals, or Saddle Clamp screw terminals. Optional mid-trip handle style actuator allows visual indication of electrical overload with or without alarm feature
- Available with new solid color rocker actuators and unique two-color Visi-rocker® actuators, which can be specified to indicate either the ON or TRIPPED/OFF mode
- Exclusive Rockerguard and Push-To-Reset bezel help prevent inadvertent actuation

HANDLE ACTUATOR

METAL TOGGLE ACTUATOR

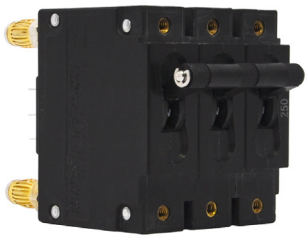

PARALLEL POLE ACTUATOR

Agency Certifications:

UL Recognized
UL Standard 1077 | UL Standard 508
UL Standard 1500
UL Listed
UL Standard 489 | UL Standard 489A
CSA Accepted | CSA Certified
TUV Certified | VDE Certified

* For full Agency Certifications, please see pg. 6

Carling Technologies®
Innovative Designs. Powerful Solutions.

Carling Technologies, Inc.
60 Johnson Avenue • Plainville, CT 06062-1177
Phone: (860) 793-9281 • Fax: (860) 793-9231
Email: sales@carlingtech.com • www.carlingtech.com

Electrical Tables

Table A: Lists UL Recognized & CSA Accepted configurations and performance capabilities as a Component Supplementary Protector

C-SERIES TABLE A: COMPONENT SUPPLEMENTARY PROTECTORS										
CIRCUIT CONFIGURATION	VOLTAGE			CURRENT RATING		SHORT CIRCUIT CAPACITY (AMPS) UL/CSA		APPLICATION CODES		NOTES
	MAX. RATING	FREQUENCY	PHASE	FULL LOAD AMPS	GENERAL PURPOSE AMPS	WITH BACKUP FUSE [1]	WITHOUT BACKUP FUSE	UL	CSA	
SERIES	32	DC	—	0.02 - 100	---	—	5000	TC1, OL1, U2	TC1, OL1, U2	
	48	DC	—	110 - 150	---	—	5000	TC1, OL1, U2	TC1, OL1, U2	Must Have Agency Code "L"
	65	DC	—	0.02 - 70	---	—	5000	TC1,2, OL1,U1	TC1,2, OL1,U1	
				—	71 -100	—	5000	TC1,2, OL0,U1	TC1,2, OL0,U1	
	80	DC	—	0.02 - 70	---	—	7500	TC1,2, OL1,U1	TC1,2, OL1,U1	
				—	71 -100	—	7500	TC1,2, OL0,U1	TC1,2, OL0,U1	
	80	DC	—	0.02 - 70	---	—	10,000	TC1,2, OL1,U1	TC1,2, OL1,U1	Must Have Agency Code "L"
				—	71 -100	—	10,000	TC1,2, OL0,U1	TC1,2, OL0,U1	Must Have Agency Code "L"
	125	DC	—	0.02 - 50	---		5000	TC1,2,OL1,U1	TC1,2,OL1,U1	Must Have Agency Code "L"
	125 / 250	DC	—	0.02 - 50	---		5000	TC1,2,OL1,U1	TC1,2,OL1,U1	Must Have Agency Code "L"
	250	DC	—	0.02 - 50	---		5000	TC1,2,OL1,U1	TC1,2,OL1,U1	Must Have Agency Code "L". 2 Pole Break Required for 250 Volts
	125	50 / 60	1	0.02 - 100	---	—	3000	TC1, OL1, U2	TC1, OL1, U2	Per Pole Rating
				0.02 - 100	---	—	5000	TC1,2,OL1,U1	TC1,2,OL1,U1	Must Have Agency Code "L"
	150	DC	—	—	80-100	---	5000	TC1, OLO, U3	—	Agency Code "L"
	150	DC	—	—	101-175	---	5000	TC, OLO, U3	—	Agency Code "L" Parallel Pole
	125 / 250	50 / 60	1	0.02 - 100	---	—	3500	TC1, OL1, U2	TC1, OL1, U2	
				0.02 - 50	---	—	3000	TC1,2,OL1,U1	TC1,2,OL1,U1	2 or 3 poles breaking single phase
				51 - 100	---	—	1000	TC1,2,OL1,U1	TC1,2,OL1,U1	2 or 3 poles breaking single phase
				0.02 - 100	---	—	5000	TC1,1,OL1,U2	TC1,1,OL1,U2	2 or 3 poles breaking single phase, "L" Agency Code
	250	50 / 60	1	0.02 - 50	---	—	3500	TC1, OL1, U2	TC1, OL1, U2	Per Pole Rating
				0.02 - 100	---	—	5000	TC1,2,OL1,U1	TC1,2,OL1,U1	Must Have Agency Code "L"
				51 - 70	---	5000	—	TC1,2,OL1,C1	TC1,2,OL1,C1	
			3	0.02 - 100	---	—	3000	TC1, OL0, U2	TC1, OL0, U2	
				0.02 - 70	---	5000	—	TC1,2,OL1,C1	TC1,2,OL1,C1	3 poles breaking 3 phase
				0.02 - 90	---	—	5000	TC1,2,OL1,U1	TC1,2,OL1,U1	Must Have Agency Code "L"
	277	50 / 60	1	0.02 - 50	---	5000	—	TC1,2,OL1,C1	TC1,2,OL1,C1	
	480 / 277	50 / 60	3	0.02 - 30	---	5000	—	TC1,2,OL1,C1	TC1,2,OL1,C1	3 poles breaking 3 phase
				—	31 - 50	5000	—	TC1,2,OL0,C1	TC1,2,OL0,C1	
	480	50 / 60	1	0.02 - 30	---	5000	—	TC1,2,OL1,C1	TC1,2,OL1,C1	2 poles breaking 1 phase
				—	31 - 50	5000	—	TC1,2,OL0,C1	TC1,2,OL0,C1	
DUAL COIL	80	DC	—	0.02 - 50	---	—	7500	TC1,2, OL1,U1	TC1,2, OL1,U1	
	125	50 / 60	1	0.02 - 50	---	—	3000	TC1, OL1, U2	TC1, OL1, U2	Per Pole Rating
	125 / 250	50 / 60	1	0.02 - 50	---	—	3500	TC1, OL1, U2	TC1, OL1, U2	2 or 3 poles breaking single phase
				0.02 - 50	---	—	3000	TC1,2,OL1,U1	TC1,2,OL1,U1	2 or 3 poles breaking single phase
	250	50 / 60	1	0.02 - 50	---	—	3500	TC1, OL1, U2	TC1, OL1, U2	Per Pole Rating
			3	0.02 - 50	---	—	3000	TC1, OL0, U2	TC1, OL0, U2	3 poles breaking 3 phase
				0.02 - 50	---	5000	—	TC1,2,OL1,C1	TC1,2,OL1,C1	3 poles breaking 3 phase
	277	50 / 60	1	0.02 - 50	---	5000	—	TC1,2,OL1,C1	TC1,2,OL1,C1	
SHUNT	80	DC	—	0.02 - 50	---	—	7500	TC1,2, OL1,U1	TC1,2, OL1,U1	
	277	50 / 60	1	0.02 - 50	---	5000	—	TC1,2,OL1,C1	TC1,2,OL1,C1	
	250	50 / 60	3	0.02 - 50	---	5000	—	TC1,2,OL1,C1	TC1,2,OL1,C1	3 poles breaking 3 phase
	480 / 277	50 / 60	3	0.02 - 30	---	5000	—	TC1,2,OL1,C1	TC1,2,OL1,C1	3 poles breaking 3 phase
				—	31 - 50	5000	—	TC1,2,OL0,C1	TC1,2,OL0,C1	
	480	50 / 60	1	0.02 - 30	---	5000	—	TC1,2,OL1,C1	TC1,2,OL1,C1	2 poles breaking 1 phase
				—	31 - 50	5000	—	TC1,2,OL0,C1	TC1,2,OL0,C1	
	80	DC	—	0.02 - 50	---	—	7500	TC1,2, OL1,U1	TC1,2, OL1,U1	
	277	50 / 60	1	0.02 - 50	---	5000	—	TC1,2,OL1,C1	TC1,2,OL1,C1	
	250	50 / 60	3	0.02 - 50	---	5000	—	TC1,2,OL1,C1	TC1,2,OL1,C1	3 poles breaking 3 phase
SWITCH ONLY	65	DC	—	0.02 - 70	—	---	—	—	---	
				—	71 -100	---	—	—	---	
	80	DC	—	0.02 - 70	—	---	—	—	---	
				—	71 -100	---	—	—	---	
	125	50 / 60	1	0.02 - 100	—	---	—	—	---	
	125 / 250	50 / 60	1	0.02 - 100	—	---	—	—	---	2 or 3 poles breaking single phase
	250	50 / 60	1	0.02 - 100	—	---	—	—	---	
			3	0.02 - 70	—	---	—	—	---	
	277	50 / 60	1	0.02 - 50	—	---	—	—	---	
	480 / 277	50 / 60	3	0.02 - 30	—	---	—	—	---	3 poles breaking 3 phase
				—	31 - 50	---	—	—	---	

Notes for Table A:

1 Requires branch circuit backup with a UL LISTED Type K5 or RK5 fuse rated 15A minimum and no more than 4 times full load amps not to exceed 125A for 50 Amp or less rating and not to exceed 175 for 51 through 100 Amp rating

*Manufacturer reserves the right to change product specification without prior notice.

Electrical Tables

Table B: Lists UL Recognized and CSA Accepted configurations and performance capabilities as a Manual Motor Controller.

C-SERIES TABLE B: MANUAL MOTOR CONTROLLERS					
CIRCUIT CONFIGURATION	VOLTAGE			CURRENT RATING	HORSEPOWER RATINGS
	MAX. RATING	FREQUENCY	PHASE	FULL LOAD AMPS	MAX HP
SERIES, SHUNT & RELAY SWITCH ONLY	120 [1]	50 / 60	1	0.02 - 50	7 1/2
	250 [1]	50 / 60	1	0.02 - 20	3
			3	0.02 - 20	5
	277 [1]	50 / 60	1	0.02 - 20	3
	480 [2]	50 / 60	3	0.02 - 20	5

Notes for Table B:

1 UL recognized and CSA Accepted at 480V refers to 3 & 4 pole versions used in a 3Ø, wye connected circuit or 2-pole version connected with 2 poles breaking. 1Ø and backed up with series fusing as stated above in note 1.

* Series, Shunt and Relay Trip - Voltage Coil Construction not current coils

Table C: Lists UL Recognized, CSA Accepted , VDE and TUV Certified configurations and performance capabilities as a Component Supplementary Protector.

C-SERIES TABLE C: COMPONENT SUPPLEMENTARY PROTECTORS														
CIRCUIT CONFIGURATION	VOLTAGE			CURRENT RATING		SHORT CIRCUIT CAPACITY (AMPS)						APPLICATION CODES		CONSTRUCTION NOTES
						UL/CSA		VDE		TUV				
	MAX. RATING	FREQUENCY	PHASE	FULL LOAD AMPS	GENERAL PURPOSE AMPS [1]	WITH BACKUP FUSE	WITHOUT BACKUP FUSE	(Inc) WITH BACKUP FUSE	(Icn) WITHOUT BACKUP FUSE	(Inc) WITH BACKUP FUSE	(Icn) WITHOUT BACKUP FUSE	UL	CSA	
SERIES	80	DC	---	0.10 - 70	---	---	7500	---	5000	5000	1500	TC1,2, OL1,U1	TC1,2, OL1,U1	
			---	71 - 100	71 -100	---	10,000	---	5000	---	5000	TC1,2, OL0,U1	TC1,2, OL0,U1	Agency Code F, H, J or R Only
	125	DC	---	1 - 50	---	---	5000	---	---	---	5000	TC1,2, OL1,U1	TC1,2, OL1,U1	Agency Code J or R Only
	250	DC	---	0.10 - 50	---	---	5000	---	---	---	5000	TC1,2, OL1,U1	TC1,2, OL1,U1	Agency Code J or R Only, 2P
		50 / 60	1	0.10 - 70	---	---	5000	3000	1500	3000	1500	TC1,2, OL1,U1	TC1,2, OL1,U1	
				0.10 - 100	---	---	5000	---	---	5000	5000	TC1,2, OL1,U1	TC1,2, OL1,U1	Agency Code J or R Only
			3	0.10 - 90	---	---	5000	---	---	5000	5000	TC1,2, OL1,U1	TC1,2, OL1,U1	Agency Code J or R Only
	415	50 / 60	3	0.10 - 30	---	5000	---	3000	1500	3000	1500	TC1,2, OL1,C1	TC1,2, OL1,C1	Rocker
						5000	---	5000	2500	3000	1500	TC1,2 ,OL1,C1	TC1,2, OL1,C1	Handle/ Agency F, H, J, or R
DUAL COIL	80	DC	---	0.10 - 30	---	---	7500	---	1500	5000	1500	TC1,2, OL1,U1	TC1,2, OL1,U1	
	250	50 / 60	1 & 3	0.10 - 30	---	---	5000	3000	1500	3000	1500	TC1,2, OL1,U1	TC1,2, OL1,U1	
SHUNT	80	DC	---	0.10 - 70	---	---	7500	---	5000	5000	1500	TC1,2, OL1,U1	TC1,2, OL1,U1	
	250	50 / 60	1 & 3	0.10 - 70	---	---	5000	3000	1500	3000	1500	TC1,2, OL1,U1	TC1,2, OL1,U1	
	415	50 / 60	3	0.10 - 30	---	5000	---	3000	1500	3000	1500	TC1,2, OL1,C1	TC1,2, OL1,C1	Rocker
						5000	---	5000	2500	3000	1500	TC1,2 ,OL1,C1	TC1,2, OL1,C1	Handle/ Agency F, H, J, or R

Notes for Table C:

1 General Purpose ratings for UL/CSA only.

2 Requires branch circuit backup with a UL LISTED Type K5 or RK5 fuse rated 15A minimum and no more than 4 times full load amps not to exceed 125A for 50 Amp or less rating and not to exceed 175 for 51 through 100 Amp rating.

Electrical Tables

Table D: Lists UL Listed (489), CSA Certified (C22.2 No. 5.1-M) configuration and performance capabilities as a Molded Case Circuit Breaker.

C SERIES TABLE D : UL489 LISTED BRANCH CIRCUIT BREAKERS						
CIRCUIT CONFIGURATION	VOLTAGE			CURRENT RATING	INTERRUPTING CAPACITY (AMPS)	CONSTRUCTION NOTES
	MAX. RATING	FREQUENCY	PHASE	FULL LOAD AMPS	WITHOUT BACKUP FUSE	
SERIES	80	DC	---	0.10 - 100	50,000 [1]	Limited to 2 Poles Max from 71 - 100 Amps.
					10,000	Limited to 2 Poles Max from 71 - 100 Amps.
	125	DC	---	0.10 - 100	5,000	1 - 3 Poles
	125 / 250	DC	---	0.10 - 50	5,000	1 or 2 Poles (2 Poles Required for 250 Volts)
	120	50 / 60	1	0.10 - 50	10,000	1 - 3 Poles
				51 - 70	5,000	1 - 3 Poles
	120 / 240	50 / 60	1	0.10 - 50	5,000	2 or 3 Poles. 1 Pole of a 3 Pole Unit is Neutral
				0.10 - 50	10000 [1]	2 or 3 Poles. 1 Pole of a 3 Pole Unit is Neutral
	240	50 / 60	1	0.10 - 30	5,000	1Pole
	240	50 / 60	1	0.10 - 20	5,000	2 Pole
	277	50 / 60	1	0.10 - 20	10,000	1Pole
DUAL COIL	120	50 / 60	1	0.10 - 30	10,000	---

Notes from Table D:
1 Special catalog number required. Consult factory.

Table E: Lists UL Recognized, CSA Accepted configurations and performance capabilities as Protectors, Supplementary for Marine Electrical and Fuel Systems (Guide PEQZ2, File E75596). Ignition Protected per UL 1500. UL Classified Small Craft Electrical Devices, Marine in accordance with ISO 8846 (Guide UZMK, File MQ1515) as Marine Supplementary Protectors.

C-SERIES TABLE E: UL1500 (Marine Ignition Protected)								
CIRCUIT CONFIGURATION	VOLTAGE			CURRENT RATING	INTERRUPTING CAPACITY (AMPS)	APPLICATION CODES		CONSTRUCTION NOTES
	MAX. RATING	FREQUENCY	PHASE	FULL LOAD AMPS	WITHOUT BACKUP FUSE	UL	CSA	
SERIES	48	DC	--	0.02 - 100	5000	TC1,2,OL1,U1	TC1,2,OL1,U1	--
				101 - 150	5000	TC1,2,OL1,U1	TC1,2,OL1,U1	--
	65	DC	--	0.02 - 100	1500	TC1,2,OL0,U1	TC1,2,OL0,U1	--
	80	DC	--	0.02 - 70	1500	TC1,2,OL1,U1	TC1,2,OL1,U1	--
	125	50 / 60	1	0.02 - 70	5000	TC1,2,OL1,U1	TC1,2,OL1,U1	--
				71 - 100	1500	TC1,2,OL1,U1	TC1,2,OL1,U1	--
	250	50 / 60	1	0.02 - 70	1500	TC1,2,OL1,U1	TC1,2,OL1,U1	--
				71 - 100	1500	TC1,2,OL1,U1	TC1,2,OL1,U1	2 Poles Breaking Single Phase

Table F: Lists UL Listed configurations and performance capabilities as Circuit Breakers for use in Communications Equipment (Guide DITT, File E189195), under UL489A.

C-SERIES TABLE F : PARALLEL POLE CONSTRUCTION UL489A LISTED FOR COMMUNICATIONS EQUIPMENT				
CIRCUIT CONFIGURATION	VOLTAGE		CURRENT RATING	INTERRUPTING CAPACITY (AMPS)
	MAX. RATING	FREQUENCY	GENERAL PURPOSE AMPS	WITHOUT BACKUP FUSE
SERIES	80	DC	110 - 250	10,000

Electrical

Maximum Voltage	AC, 480 WYE/277 VAC, 50/60 Hz (see Table A.) UL489: AC,240 VAC. (Table D), 50/60 Hz, 125 VDC, UL 1077, 150 VDC, 277 VAC
Current Rating	Standard current coils: 0.100, 0.250, 0.500, 0.750, 1.00, 2.50, 5.00, 7.50, 10.0, 15.0, 25.0, 30.0, 35.0, 40.0, 50.0, 60.0, 70.0, 80.0, 90.0 and 100 amps. Other ratings available, see Ordering Scheme.
Standard Voltage Coils	DC - 6V, 12V; AC - 120V; other ratings available, see Ordering Scheme.
Auxiliary Switch Rating	SPDT; 10.1 amps-250VAC, DC Aux. Switch 1.0A, 65 VDC. 0.5A, 80VDC,1/4 HP, 125VAC,VDE & TUV 1.0 125 VAC.
Insulation Resistance	Minimum of 100 Megohms at 500 VDC.
Dielectric Strength	UL, CSA: 1960 V 50/60 Hz for one minute between all electrically isolated terminals. C-Series Circuit Breakers comply with the 8mm spacing and 3750V 50/60 Hz dielectric requirements from hazardous voltage to operator accessible surfaces, between adjacent poles and from main circuits to auxiliary circuits per Publications EN 60950 and VDE 0805.
Resistance, Impedance	Values from Line to Load Terminal based on Series Trip Circuit Breaker.

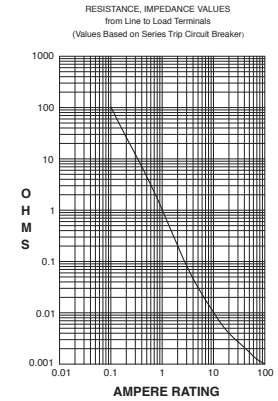

CURRENT (AMPS)	TOLERANCE (%)
0.10 - 5.0	15%
5.1 - 20.0	25%
20.1 - 100.0	35%

Pulse Tolerance Curves

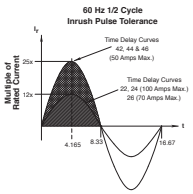

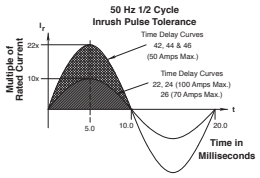

Mechanical

Endurance	10,000 ON-OFF operations @ 6 per minute; with rated current & voltage
Trip Free	All C-Series circuit breakers will trip on overload, even when actuator is forcibly held in the ON position.
Trip Indication	The operating actuator moves positively to the OFF position when an overload causes the breaker to trip. With mid-trip, handle moves to the mid position on electrical trip of the circuit breaker. With mid trip handle with alarm switch, handle moves to the mid position and the alarm switch actuates when the circuit breaker is electrically tripped.

Physical

Number of Poles	1-6 poles ≤ 50A; 1-4 poles @ 51-70A; 1-2 poles 71-100A. UL489 Handle: 1 pole ≤ 100A, 2 pole ≤ 50A; Rocker: 1 pole ≤ 100A.
Internal Circuit Configuration	Series (with or without auxiliary switch, mid trip & mid trip with alarm switch) Shunt & Relay with current or voltage trip coils, Dual Coil, Switch Only (with or without aux. switch). UL489: Series (with or without auxiliary switch, mid-trip & mid-trip with alarm switch).
Weight	Approx.112 grams/pole (3.95 oz).
Standard Colors	Housing: Black

Environmental

Designed and tested in accordance with requirements of specification MIL-PRF-55629 & MIL-STD-202 as follows:

Shock	Withstands 100 Gs, 6ms sawtooth while carrying rated current per Method 213, Test Condition "I". Instantaneous and ultrashort curves tested @ 90% of rated current.
Vibration	Withstands 0.060" excursion from 10-55 Hz & 10 Gs 55-500 Hz, @ rated current per Method 204C, Test Cond. A. Instantaneous & ultrashort curves tested @ 90% of rated current.
Moisture Resistance	Method 106D, i.e., ten 24-hour cycles @ +25°C to +65°C, 80-98% RH.
Salt Spray	Method 101, Condition A (90-95% RH @ 5% NaCl Solution, 96 hrs).
Thermal Shock	Method 107D, Condition A (five cycles @ -55°C to +25°C to +85°C to +25°C).
Operating Temperature	-40°C to +85°C

Agency Certifications:

UL Recognized

UL Standard 1077	Component Recognition Program as Protectors, Supplementary (Guide CCN/QVNU2, File E75596)
UL Standard 508	Motor Controllers, Manual (Guide CCN/NLRV2, File E135367)
UL Standard 1500	Protectors, Supplementary for Marine Electrical & Fuel Systems (Guide PEQZ2, File E75596) Ignition Protection

UL Listed

UL Standard 489	Circuit Breakers, Molded Case, (Guide DIVQ, File E129899)
UL Standard 489A	Communications Equipment (Guide CCN/DITT, File E189195)
CSA Accepted	Component Supplementary Protector under Class 3215 30, File 047848 0 000 CSA Standard C22.2 No. 235
CSA Certified	Circuit Breaker Model Case (Class 1432 01, File 093910), CSA Standard C22.2 No. 5.1 - M
TUV Certified	EN60934, under License No. R72041016
VDE Certified	EN60934, VDE 0642 under File No. 10537

C	A	3	–	B	0	–	10	–	450	–	1	2	1	–	C
1 Series	2 Actuator	3 Poles		4 Circuit	5 Aux/Alarm Switch		6 Frequency & Delay		7 Current Rating		8 Terminal	9 Actuator Color	10 Mounting Bezel/Barrier		11 Agency Approval

1 SERIES
C

2 ACTUATOR[1]

A	Handle, one per pole
B	Handle, one per multipole unit
S	Mid-Trip Handle, one per pole
T	Mid-Trip, one per pole & Alarm Switch

3 POLES[2]

1	One	**3**	Three	**5**	Five
2	Two	**4**	Four	**6**	Six

4 CIRCUIT[3]

A[3]	Switch Only (no coil)	**F**[4]	Relay Trip (current)
B	Series Trip (current)	**G**[4]	Relay Trip (voltage)
C	Series Trip (voltage)	**H**[4,5]	Dual Coil with Shunt Trip Voltage Coil
D[4]	Shunt Trip (current)	**K**[4,5]	Dual Coil with Relay Trip Voltage Coil
E[4]	Shunt Trip (voltage)		

5 AUXILIARY/ALARM SWITCH

0	without Aux Switch	**6**	S.P.S.T., 0.139 Solder Lug
2	S.P.D.T., 0.110 Q.C. Terminal	**8**	S.P.S.T., 0.187 Q.C. Terminal
3	S.P.D.T., 0.139 Solder Lug	**9**	S.P.D.T., 0.187 Q.C. Terminal
4	S.P.D.T., 0.110 Q.C. Terminal (Gold Contacts)		

6 FREQUENCY & DELAY

03[3]	DC 50/60Hz, Switch Only	**30**	DC 50/60Hz Instantaneous
10[7]	DC Instantaneous	**31**	DC 50/60Hz Ultra Short
11	DC Ultra Short	**32**	DC 50/60Hz Short
12	DC Short	**34**	DC 50/60Hz Medium
14	DC Medium	**36**	DC 50/60Hz Long
16	DC Long	**42**[8]	50/60Hz Short, Hi-Inrush
20[7]	50/60Hz Instantaneous	**44**[8]	50/60Hz Medium, Hi-Inrush
21	50/60Hz Ultra Short	**46**[8]	50/60Hz Long, Hi-Inrush
22	50/60Hz Short	**52**[8]	DC Short, Hi-Inrush
24	50/60Hz Medium	**54**[8]	DC Medium, Hi-Inrush
26	50/60Hz Long	**56**	DC Long, Hi-Inrush

Notes:

1 Actuator Code:
A: Handle tie pin spacer(s) and retainers provided assembled with multi-pole units.
B: Handle location as viewed from front of breaker:
2 pole - left pole 3 pole - center pole 4 pole - two handles at center poles
5 pole - three handles at center poles 6 pole - four handles at center poles
S: Handle moves to mid-position only upon electrical trip of the breaker. Available with circuit codes B, C, D, E, F, G, H and K.
T: Handle moves to mid-position and alarm switch activates only upon electrical trip of the breaker. Available with circuit codes B & C.

2 Standard multipole units have all poles identical except when specifying auxilary switch and/or mixed poles. 4 pole max w/VDE. 5th pole available as Series Trip w/Voltage Coil only.

3 Switch Only circuits, rated up to 50 amps and 6 poles, and only available with VDE Certification when tied to a protected pole (Circuit Code B, C, D or H.). For .02 to 30 amps, select Current Code 630. For 35 - 50 amps, select Current Code 650. For 55-70 amps, select Current Code 670. For 75-100 amps, select Current Code 810.

4 Circuit Codes D,E,F,G,H & K available with Terminal Codes 1,2,4 & 5 only. Circuit Codes D, F, H & K available up to 50 amps maximum Current Rating.

5 Consult factory for available Dual Coil options, as special catalog number is required. Dual Coil Voltage Coils with Shunt Trip Construction trip instantaneously on line voltage. Dual Coil Voltage Coils require 30VA minimum power to trip instantaneously and are rated for intermittent duty only.
ers, one aux. switch is supplied, mounted in the extreme right pole.

6 Voltage coils not rated for continuous duty. Available only with delay codes 10 and 20. Available with Circuit Codes B & D only, and up to 50 amps maximum.

7 Current Ratings 60 - 70 are available up to four poles maximum. Ratings 71 - 100 are available up to two poles maximum.

8

9 Terminal Code 1 available to 60 amps maximum.
Terminal Codes 2,4,5 and C available to 50 amps maximum.

10 Terminal Codes 3,6 & 9 available to 100 amps maximum.

11 Terminal Code 7 available to 25 amps maximum.

12 Terminal Code A available to 100 amps maximum.

13 Terminal Codes 7,8,9 & C are not VDE approved.

14 No marking available. Consult factory. VDE/TUV Approval requires dual (I-O, ON-OFF) or I-O markings on all handles.

15 Single pole only.

16 VDE/TUV: 30 amps max.; UL/CSA: 50 amps max.; Available in 2 - 4 poles only and limited to AC Delays. "General Purpose amps" not rated for "full load amps" or to be used in applications with a motor.

17

18

7 CURRENT RATING (AMPERES)

CODE	AMPERES	CODE	AMPERES	CODE	AMPERES	CODE	AMPERES
020	0.020	**235**	0.350	**430**	3.000	**614**	14.000
025	0.025	**240**	0.400	**435**	3.500	**615**	15.000
030	0.030	**245**	0.450	**440**	4.000	**616**	16.000
035	0.035	**250**	0.500	**445**	4.500	**617**	17.000
040	0.040	**255**	0.550	**450**	5.000	**618**	18.000
045	0.045	**260**	0.600	**455**	5.500	**620**	20.000
050	0.050	**265**	0.650	**460**	6.000	**622**	22.000
055	0.055	**270**	0.700	**465**	6.500	**624**	24.000
060	0.060	**275**	0.750	**470**	7.000	**625**	25.000
065	0.065	**280**	0.800	**475**	7.500	**630**	30.000
070	0.070	**285**	0.850	**480**	8.000	**635**	35.000
075	0.075	**290**	0.900	**485**	8.500	**640**	40.000
080	0.080	**295**	0.950	**490**	9.000	**650**	50.000
085	0.085	**410**	1.000	**495**	9.500	**660**[9]	60.000
090	0.090	**512**	1.250	**610**	10.000	**670**[9]	70.000
095	0.095	**415**	1.500	**710**	10.500	**680**[9]	80.000
210	0.100	**517**	1.750	**611**	11.000	**685**[9]	85.000
215	0.150	**420**	2.000	**711**	11.500	**690**[9]	90.000
220	0.200	**522**	2.250	**612**	12.000	**695**[9]	95.000
225	0.250	**425**	2.500	**712**	12.500	**810**[9]	100.000
230	0.300	**527**	2.750	**613**	13.000		

VOLTAGE COIL (NORMINAL RATED VOLTAGE)[7]

CODE	RATING	CODE	RATING	CODE	RATING	CODE	RATING
A06	6DC	**A32**	32DC	**J12**	12AC	**J65**	65AC
A12	12DC	**A48**	48DC	**J18**	18AC	**K20**	120AC
A18	18DC	**A65**	65DC	**J24**	24AC	**L40**	240AC
A24	24DC	**J06**	6AC	**J48**	48AC		

8 TERMINAL[15]

1[10]	Stud 10-32, threaded	**6**[12]	Stud M6, threaded
2[11]	Screw 10-32	**7**[13,15]	0.250 Double Click Connect
3[12]	Stud 1/4-20, threaded	**8**[15]	1/4" Clip Terminal
4[11]	Stud M5 x 0.8, threaded	**9**[12,15]	7/16" Clip Terminal
5[11]	Screw M5 x 0.8	**A**[14]	Plug-In Stud
		C[11,15]	5/16" Clip Terminal

9 ACTUATOR COLOR & LEGEND[16]

Actuator Color	I-O	ON-OFF	Dual	Legend Color
White	**A**	**B**	**1**	Black
Black	**C**	**D**	**2**	White
Red	**F**	**G**	**3**	White
Green	**H**	**J**	**4**	White
Blue	**K**	**L**	**5**	White
Yellow	**M**	**N**	**6**	Black
Gray	**P**	**Q**	**7**	Black
Orange	**R**	**S**	**8**	Black
Black (short handle)[17]	**T**	**U**	**9**	White

10 MOUNTING/BARRIERS

	MOUNTING STYLE	BARRIERS	VOLTAGE
	Threaded Insert		
1	6-32 x 0.195 inches	no	< 300
A	6-32 x 0.195 inches	yes	< 300
C[18]	6-32 x 0.195 inches	yes	≥ 300
2	ISO M3 x 5mm	no	< 300
B	ISO M3 x 5mm	yes	< 300
D[18]	ISO M3 x 5mm	yes	≥ 300
	Front Panel Snap-In, 1.00" [25.4mm] wide bezel		
E[17]	with Handleguard	no	< 300

11 AGENCY APPROVAL

C	UL Recognized, CSA Accepted
D	VDE Certified, UL Recognized, CSA Accepted
E	TUV Certified, UL Recognized, CSA Accepted
H	UL489 Construction: VDE Certified, UL Recognized, CSA Accepted
I	UL Rec. STD 1077, UL Rec. 1500 (ignition protected), CSA Accepted
L	UL489 Construction: UL Recognized, CSA Accepted
R	UL489 Construction: TUV Certified, UL Recognized, CSA Accepted

C	A	2	—	P	0	—	D4	—	820	—	3	2	1	—	M	T
1 Series	2 Actuator	3 Poles		4 Circuit	5 Aux/Alarm Switch		6 Frequency & Delay		7 Current Rating		8 Terminal	9 Actuator Color	10 Mounting		11 Max. App. Rating	12 Agency Approval

1 SERIES
C

2 ACTUATOR[1]
A Handle, one per pole
S Mid-Trip Handle, one per pole
T Mid-Trip, one per pole & Alarm Switch

3 POLES[3]
2 Two
3 Three

4 CIRCUIT
P Series Trip (parallel pole)

5 AUXILIARY/ALARM SWITCH
0 without Aux Switch
2 S.P.D.T., 0.110 Q.C. Terminal
3 S.P.D.T., 0.139 Solder Lug
4 S.P.D.T., 0.110 Q.C. Terminal (Gold Contacts)
6 S.P.S.T., 0.139 Solder Lug
8 S.P.S.T., 0.187 Q.C. Terminal
9 S.P.D.T., 0.187 Q.C. Terminal

6 FREQUENCY & DELAY
D1 DC Ultra Short
D2 DC Short
D4 DC Medium
D6 DC Long

7 CURRENT RATING (AMPERES)

CODE	AMPERES	CODE	AMPERES	CODE	AMPERES	CODE	AMPERES
811	110.000	**814**	140.000	**917**	170.000	**922**[3]	225.000
812	120.000	**815**	150.000	**818**	180.000	**825**[3]	250.000
912	125.000	**816**	160.000	**819**	190.000		
813	130.000	**817**	170.000	**820**	200.000		

8 TERMINAL[2]
3 1/4-20, threaded
6 M6, threaded
A Plug-In Stud

9 ACTUATOR COLOR

	LEGEND ON-OFF	Dual	Legend Color
White	**B**	**1**	Black
Black	**D**	**2**	White
Red	**G**	**3**	White
Green	**J**	**4**	White
Blue	**L**	**5**	White
Yellow	**N**	**6**	Black
Gray	**Q**	**7**	Black
Orange	**S**	**8**	Black

10 MOUNTING/BARRIERS
MOUNTING STYLE
Threaded Insert
1 6-32 x 0.195 inches
2 ISO M3 x 5mm

11 MAXIMUM APPLICATION RATING
M 80 DC

12 AGENCY APPROVAL
T UL489A Listed (up to 250 amps)
K UL489A Listed, VDE Certified (up to 200 amps)
7 UL489A Listed, TUV Certified (up to 250 amps)

Notes:
1 Actuator Code:
A: Handle tie pin spacer(s) and retainers provided assembled with multi-pole units.
S: Handle moves to mid-position only upon electrical trip of the breaker.
T: Handle moves to mid-position and alarm switch activates only upon electrical trip of the breaker.
2 Terminal Code:
3 & 6: Supplied with bus bars connecting the Line and Load Terminals.
A: Line and Load Terminals must be connected to a copper bus bar having a minimum cross section of 0.078 square inches.
3 Above 200 amps, 3 poles are required.

C	A	3	–	B	0	–	14	–	450	–	1	2	1	–	K	G
1 Series	2 Actuator	3 Poles		4 Circuit	5 Aux/Alarm Switch		6 Frequency & Delay		7 Current Rating		8 Terminal	9 Actuator Color	10 Mounting/ Barriers		11 Max. App. Rating	12Agency Approval

1 SERIES
C

2 ACTUATOR[1]
A Handle, one per pole
B Handle, one per multipole unit
S Mid-Trip Handle, one per pole
T Mid-Trip, one per pole & Alarm Switch

3 POLES[2]
1 One **2** Two **3** Three

4 CIRCUIT
B Series Trip (current)

5 AUXILIARY/ALARM SWITCH[3]
0 without Aux Switch
2 S.P.D.T., 0.110 Q.C. Terminal
3 S.P.D.T., 0.139 Solder Lug
4 S.P.D.T., 0.110 Q.C. Terminal (Gold Contacts)
6 S.P.S.T., 0.139 Solder Lug
8 S.P.S.T., 0.187 Q.C. Terminal
9 S.P.D.T., 0.187 Q.C. Terminal

6 FREQUENCY & DELAY
11 DC Ultra Short
12 DC Short
14 DC Medium
16 DC Long
21 50/60Hz Ultra Short
22 50/60Hz Short
24 50/60Hz Medium
26 50/60Hz Long
42[4] 50/60Hz Short, Hi-Inrush
44[4] 50/60Hz Medium, Hi-Inrush
46[4] 50/60Hz Long, Hi-Inrush
52[4] DC Short, Hi-Inrush
54[4] DC Medium, Hi-Inrush
56[4] DC Long, Hi-Inrush

Notes:
1 Actuator Code:
A: Handle tie pin spacer(s) and retainers provided assembled with multi-pole units.
B: Handle located, as viewed from front of breaker in left pole. 2 pole maximum.
S: Handle moves to mid-position only upon electrical trip of the breaker.
T: Handle moves to mid-position and alarm switch activates only upon electrical trip of the breaker.
2 Standard multipole units have all poles identical except when specifying auxiliary switch and/or mixed poles.
2 & 3 pole circuit breakers required for 120/240 VAC (Maximum application rating code C) applications, have all poles identical except when specifying auxiliary / alarm switch which is normally supplied in extreme right pole per figure B. Terminal barriers are required on all multipole breakers.
Third pole is for 120/240 VAC applications requiring neutral disconnect. The 3rd pole has the same construction as poles 1 & 2.
3 On multi-pole breakers, one auxiliary. switch is supplied, mounted in the extreme right pole.
VDE approval on auxiliary switch codes 2, 3 & 4 only.
Auxiliary / Alarm Switch with Independent Circuit ie: separate from breaker circuit, only available with circuit breakers rated 50 amp maximum at 80 VDC, 125 VDC, and 120 VAC. Auxiliary / Alarm Switch with Dependent Circuit ie: same as circuit breaker, is supplied from factory with common terminal of auxiliary / alarm switch connected to line terminal on 120/240 and 240 VAC ratings. Circuit breakers rated 120 VAC 50 amp maximum can be supplied with Auxiliary/Alarm switch common terminal connected to breaker line terminal. Consult factory for special catalog number.
4 Available up to 50 amps maximum.
5 Current ratings 71 - 100 with VDE approvals are available up to two poles maximum.
6 Terminal Codes 8, 9 & C are not VDE approved.
7 Terminal Code 1 available to 60 amps maximum.
8 Terminal Codes 2, 4, 5 & C available to 50 amps maximum.
9 Terminal Codes 3, 6 & 9 available to 100 amps maximum.
10 Terminal Code A available to 100 amps maximum.
11 VDE and TUV approvals require Dual (I-O, ON-OFF) markings on all handles.
12 Barriers supplied on multi-pole units only.

7 CURRENT RATING (AMPERES)[5]

CODE	AMPERES	CODE	AMPERES	CODE	AMPERES	CODE	AMPERES
210	0.100	**295**	0.950	**470**	7.000	**618**	18.000
215	0.150	**410**	1.000	**475**	7.500	**620**	20.000
220	0.200	**512**	1.250	**480**	8.000	**622**	22.000
225	0.250	**415**	1.500	**485**	8.500	**624**	24.000
230	0.300	**517**	1.750	**490**	9.000	**625**	25.000
235	0.350	**420**	2.000	**495**	9.500	**630**	30.000
240	0.400	**522**	2.250	**610**	10.000	**635**	35.000
245	0.450	**425**	2.500	**710**	10.500	**640**	40.000
250	0.500	**527**	2.750	**611**	11.000	**660**	60.000
255	0.550	**430**	3.000	**711**	11.500	**670**	70.000
260	0.600	**435**	3.500	**612**	12.000	**680**	80.000
265	0.650	**440**	4.000	**712**	12.500	**685**	85.000
270	0.700	**445**	4.500	**613**	13.000	**690**	90.000
275	0.750	**450**	5.000	**614**	14.000	**695**	95.000
280	0.800	**455**	5.500	**615**	15.000	**810**	100.000
285	0.850	**460**	6.000	**616**	16.000		
290	0.900	**465**	6.500	**617**	17.000		

8 TERMINAL[6]
1[7] Stud 10-32, threaded
2[8] Screw 10-32
3[9] Stud 1/4-20, threaded
4[8] Stud M5 x 0.8, threaded
5[8] Screw M5 x 0.8
6[9] Stud M6, threaded
8 1/4" Clip Terminal
9[9] 7/16" Clip Terminal
A[10] Plug-In Stud
C 5/16" Clip Terminal

9 ACTUATOR COLOR & LEGEND[11]

Actuator Color	ON-OFF	Dual	Legend Color
White	**B**	**1**	Black
Black	**D**	**2**	White
Red	**G**	**3**	White
Green	**J**	**4**	White
Blue	**L**	**5**	White
Yellow	**N**	**6**	Black
Gray	**Q**	**7**	Black
Orange	**S**	**8**	Black

10 MOUNTING/BARRIERS

	MOUNTING STYLE *Threaded Insert*	BARRIERS[12]
1	6-32 x 0.195 inches	yes
2	ISO M3 x 5mm	yes

11 MAXIMUM APPLICATION RATING
A 65 DC
B 125 DC
C 120/240 AC[2]
D 240 AC
F 277 AC
K 120 AC
M 80 DC

12 AGENCY APPROVAL[11]
A without approvals
F UL489 Listed, VDE Certified, CSA Accepted
G UL489 Listed, CSA Accepted
J UL489 Listed, TUV Certified, CSA Accepted

C	M	3	–	B	0	–	10	–	450	–	1	0	1	–	C
1 Series	2 Actuator	3 Poles		4 Circuit	5 Aux/Alarm Switch		6 Frequency & Delay		7 Current Rating		8 Terminal	9 Legend Plate	10 Mounting Bezel/Barrier		11 Agency Approval

1 SERIES
C

2 ACTUATOR[1]
M Sealed Toggle, one per pole

3 POLES
1 One **2** Two **3** Three

4 CIRCUIT
A[2] Switch Only (no coil)
B Series Trip (current)
C Series Trip (voltage)
D[3] Shunt Trip (current)
E[3] Shunt Trip (voltage)
F[3] Relay Trip (current)
G[3] Relay Trip (voltage)
H[3,4] Dual Coil with Shunt Trip Voltage Coil
K[3,4] Dual Coil with Relay Trip Voltage Coil

5 AUXILIARY/ALARM SWITCH
0 without Aux Switch
2 S.P.D.T., 0.110 Q.C. Terminal
3 S.P.D.T., 0.139 Solder Lug
4 S.P.D.T., 0.110 Q.C. Terminal (Gold Contacts)
6 S.P.S.T., 0.139 Solder Lug
8 S.P.S.T., 0.187 Q.C. Terminal
9 S.P.D.T., 0.187 Q.C. Terminal

6 FREQUENCY & DELAY
03[2] DC 50/60Hz, Switch Only
10[6] DC Instantaneous
11 DC Ultra Short
12 DC Short
14 DC Medium
16 DC Long
20[6] 50/60Hz Instantaneous
21 50/60Hz Ultra Short
22 50/60Hz Short
24 50/60Hz Medium
26 50/60Hz Long
30 DC 50/60Hz Instantaneous
31 DC 50/60Hz Ultra Short
32 DC 50/60Hz Short
34 DC 50/60Hz Medium
36 DC 50/60Hz Long
42[7] 50/60Hz Short, Hi-Inrush
44[7] 50/60Hz Medium, Hi-Inrush
46[7] 50/60Hz Long, Hi-Inrush
52[7] DC Short, Hi-Inrush
54[7] DC Medium, Hi-Inrush
56 DC Long, Hi-Inrush

Notes:
1 Actuator Code M: Handle location as viewed from front of breaker:
2 pole - right pole 3 pole - center pole
2 Switch Only circuits, rated up to 50 amps and 3 poles, and only available with VDE. For .02 to 30 amps, select Current Code 630. For 35 - 50 amps, select Current Code 650. For 55-70 amps, select Current Code 670. For 75-100 amps, select Current Code 810.
3 Circuit Codes D,E,F,G,H & K available with Terminal Codes 1,2,4 & 5 only.
4 Consult factory for available Dual Coil options, as special catalog number is required. Dual Coil Voltage Coils with Shunt Trip Construction trip instantaneously on line voltage. Dual Coil Voltage Coils require 30VA minimum power to trip instantaneously and are rated for intermittent duty only.
5 Auxiliary Switch available with Series Trip and Switch Only circuits. On multi-pole breakers, one aux. switch is supplied, mounted in the extreme right pole.
6 Voltage coils not rated for continuous duty. Available only with delay codes 10 and 20.
7 Available with Circuit Codes B & D only, and up to 50 amps maximum.
8 Consult factory for current ratings 71-100, in three pole units, available as special catalog number only.
9 Terminal Code 1 available to 60 amps maximum.
10 Terminal Codes 2,4,5 and C available to 50 amps maximum.
11 Terminal Codes 3,6 & 9 available to 100 amps maximum.
12 Terminal Code 7 available to 25 amps maximum.
13 Terminal Code A available to 100 amps maximum.

7 CURRENT RATING (AMPERES)[9]

CODE	AMPERES	CODE	AMPERES	CODE	AMPERES	CODE	AMPERES
020	0.020	**235**	0.350	**430**	3.000	**614**	14.000
025	0.025	**240**	0.400	**435**	3.500	**615**	15.000
030	0.030	**245**	0.450	**440**	4.000	**616**	16.000
035	0.035	**250**	0.500	**445**	4.500	**617**	17.000
040	0.040	**255**	0.550	**450**	5.000	**618**	18.000
045	0.045	**260**	0.600	**455**	5.500	**620**	20.000
050	0.050	**265**	0.650	**460**	6.000	**622**	22.000
055	0.055	**270**	0.700	**465**	6.500	**624**	24.000
060	0.060	**275**	0.750	**470**	7.000	**625**	25.000
065	0.065	**280**	0.800	**475**	7.500	**630**	30.000
070	0.070	**285**	0.850	**480**	8.000	**635**	35.000
075	0.075	**290**	0.900	**485**	8.500	**640**	40.000
080	0.080	**295**	0.950	**490**	9.000	**650**	50.000
085	0.085	**410**	1.000	**495**	9.500	**660**[9]	60.000
090	0.090	**512**	1.250	**610**	10.000	**670**[9]	70.000
095	0.095	**415**	1.500	**710**	10.500	**680**[9]	80.000
210	0.100	**517**	1.750	**611**	11.000	**685**[9]	85.000
215	0.150	**420**	2.000	**711**	11.500	**690**[9]	90.000
220	0.200	**522**	2.250	**612**	12.000	**695**[9]	95.000
225	0.250	**425**	2.500	**712**	12.500	**810**[9]	100.000
230	0.300	**527**	2.750	**613**	13.000		

VOLTAGE COIL (NORMINAL RATED VOLTAGE)[7]

CODE	RATING	CODE	RATING	CODE	RATING	CODE	RATING
A06	6DC	**A32**	32DC	**J12**	12AC	**J65**	65AC
A12	12DC	**A48**	48DC	**J18**	18AC	**K20**	120AC
A18	18DC	**A65**	65DC	**J24**	24AC	**L40**	240AC
A24	24DC	**J06**	6AC	**J48**	48AC		

8 TERMINAL
1[9] Stud 10-32, threaded
2[10] Screw 10-32
3[11] Stud 1/4-20, threaded
4[10] Stud M5 x 0.8, threaded
5[10] Screw M5 x 0.8
6[11] Stud M6, threaded
7[12] 0.250 Double Click Connect
8 1/4" Clip Terminal
9[11] 7/16" Clip Terminal
A[13] Plug-In Stud
C[10] 5/16" Clip Terminal

9 LEGEND PLATE
0 No Legend

10 MOUNTING/BARRIERS

	MOUNTING STYLE	BARRIERS
1	Standard Hex Nut	no
A	Standard Hex Nut (multi-pole units only)	yes

11 AGENCY APPROVAL
C UL Recognized, CSA Accepted
L UL Recognized, CSA Accepted with listed construction
I UL Recognized, CSA Accepted, UL1500 ignition protection

C	C	3	–	B	0	–	14	–	450	–	1	2	1	–	D
1 Series	2 Actuator	3 Poles		4 Circuit	5 Aux/Alarm Switch		6 Frequency & Delay		7 Current Rating		8 Terminal	9 Actuator Color	10 Mounting/ Barriers		11 Agency Approval

1 SERIES
C

2 ACTUATOR[1]

Two Color Visi-Rocker

C	Indicate ON, vertical legend
D	Indicate ON, horizontal legend
E	Indicate ON, no legend
F	Indicate OFF, vertical legend
G	Indicate OFF, horizontal legend
H	Indicate OFF, no legend

Push-To-Reset, Visi-Rocker

N	Indicate OFF, vertical legend
O	Indicate OFF, horizontal legend
P	Indicate OFF, no legend

Single color

J	*Vertical legend*
K	Horizontal legend
L	No legend

Push-To-Reset, Single color

R	*Vertical legend*
U	Horizontal legend
V	No legend

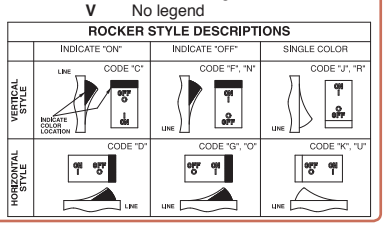

3 POLES[2]

1	One	**2**	Two	**3**	Three

4 CIRCUIT

A[3]	Switch Only (No Coil)
B	Series Trip (Current)
C	Series Trip (Voltage)
D[4]	Shunt Trip (Current)
E[4]	Shunt Trip (Voltage)
F[4]	Relay Trip (Current)
G[4]	Relay Trip (Voltage)
H[4,5]	Dual Coil with Shunt Trip Voltage Coil
K[4,5]	Dual Coil with Relay Trip Voltage Coil

5 AUXILIARY/ALARM SWITCH[6]

0	without Aux Switch
2	S.P.D.T., 0.110 Q.C. Terminal
3	S.P.D.T., 0.139 Solder Lug
4	S.P.D.T., 0.110 Q.C. Terminal (Gold Contacts)
6	S.P.S.T., 0.139 Solder Lug
8	S.P.S.T., 0.187 Q.C. Terminal
9	S.P.D.T., 0.187 Q.C. Terminal

6 FREQUENCY & DELAY

03	DC 50/60Hz, Switch Only
10[7]	DC Instantaneous
11	DC Ultra Short
12	DC Short
14	DC Medium
16	DC Long
20[7]	50/60Hz Instantaneous
21	50/60Hz Ultra Short
22	50/60Hz Short
24	50/60Hz Medium
26	50/60Hz Long
30	DC 50/60Hz Instantaneous
31	DC 50/60Hz Ultra Short
32	DC 50/60Hz Short
34	DC 50/60Hz Medium
36	DC 50/60Hz Long
42[8]	50/60Hz Short, Hi-Inrush
44[8]	50/60Hz Medium, Hi-Inrush
46[8]	50/60Hz Long, Hi-Inrush
52[8]	DC Short, Hi-Inrush
54[8]	DC Medium, Hi-Inrush
56[8]	DC Long, Hi-Inrush

Notes:

1. Push-To-Reset actuators have OFF portion of rocker shrouded.
2. Multi-pole breakers have all poles identical except when specifying Aux. switch and/or mixed poles, and have one rocker per breaker. Rocker location as viewed from front panel: 2 pole – left pole; 3 pole – center pole.
3. Switch Only circuits, rated up to 50 amps and 3 poles, and only available with VDE Certification when tied to a protected pole (Circuit Code B, C, D or H.), For .02 to 30 amps, select Current Code 630. For 35 - 50 amps, select Current Code 650. For 55-70 amps, select Current Code 670. For 75-100 amps, select Current Code 810.
4. Circuit Codes D,E,F,G,H & K available with Terminal Codes 1,2,4 & 5 only. Circuit Codes D,F,H & K available up to 50 amps maximum Current Rating.
5. Consult factory for available Dual Coil options, as special catalog number is required. Dual Coil Voltage Coils with Shunt Trip Construction trip instantaneously on line voltage. Dual Coil Voltage Coils require 30VA minimum power to trip instantaneously and are rated for intermittent duty only.
6. Auxiliary Switch available with Series Trip and Switch Only circuits. On multi-pole breakers, one aux. switch is supplied, mounted in the extreme right pole.Auxilary switch codes 2,3 & 4 are VDE approved.
7. Voltage coils not rated for continuous duty. Available only with delay codes 10 and 20.
8. Available with Circuit Codes B & D only, and up to 50 amps maximum.
9. Current Ratings 60-70 are available up to four poles maximum. Ratings 71-100 are available up to two poles maximum.
10. Terminal Code 1 available to 60 amps maximum.
11. Terminal Codes 2,4,5 & C available to 50 amps maximum.
12. Terminal Codes 3,6 & 9 available to 100 amps maximum.
13. Terminal Code 7 available to 25 amps maximum.
14. Terminal Code A available to 100 amps maximum.
15. Terminal Codes 7,8,9 & C are not VDE approved.
16. Color shown is visi and legend with remainder of rocker black
17. Legend on Push-to-reset bezel/shroud is white when single color rocker is ordered. Dual = ON-OFF/I-O legend with actuator codes C - G, and J, K, N, O, R, & U. None = no legend with actuator codes H, L, P, V. Rocker-guard available with actuator codes C - L. Push-to-reset available witha ctuator codes N, O, P, R, U, V.
18. VDE/TUV approval requires Dual (I-O, ON-OFF) or I-O markings on rocker.
19. VDE/TUV: 30 amps max.; UL/CSA: 50 amps max.; Available in 2 - 4 poles only and limited to AC Delays. "General Purpose amps" not rated for "full load amps" or to be used in applications with a motor.

7 CURRENT RATING (AMPERES)

CODE	AMPERES	CODE	AMPERES	CODE	AMPERES	CODE	AMPERES
020	0.020	**235**	0.350	**430**	3.000	**614**	14.000
025	0.025	**240**	0.400	**435**	3.500	**615**	15.000
030	0.030	**245**	0.450	**440**	4.000	**616**	16.000
035	0.035	**250**	0.500	**445**	4.500	**617**	17.000
040	0.040	**255**	0.550	**450**	5.000	**618**	18.000
045	0.045	**260**	0.600	**455**	5.500	**620**	20.000
050	0.050	**265**	0.650	**460**	6.000	**622**	22.000
055	0.055	**270**	0.700	**465**	6.500	**624**	24.000
060	0.060	**275**	0.750	**470**	7.000	**625**	25.000
065	0.065	**280**	0.800	**475**	7.500	**630**	30.000
070	0.070	**285**	0.850	**480**	8.000	**635**	35.000
075	0.075	**290**	0.900	**485**	8.500	**640**	40.000
080	0.080	**295**	0.950	**490**	9.000	**650**	50.000
085	0.085	**410**	1.000	**495**	9.500	**660**[9]	60.000
090	0.090	**512**	1.250	**610**	10.000	**670**[9]	70.000
095	0.095	**415**	1.500	**710**	10.500	**680**[9]	80.000
210	0.100	**517**	1.750	**611**	11.000	**685**[9]	85.000
215	0.150	**420**	2.000	**711**	11.500	**690**[9]	90.000
220	0.200	**522**	2.250	**612**	12.000	**695**[9]	95.000
225	0.250	**425**	2.500	**712**	12.500	**810**[9]	100.000
230	0.300	**527**	2.750	**613**	13.000		

VOLTAGE COIL (NORMINAL RATED VOLTAGE)[7]

CODE	RATING	CODE	RATING	CODE	RATING	CODE	RATING
A06	6DC	**A32**	32DC	**J12**	12AC	**J65**	65AC
A12	12DC	**A48**	48DC	**J18**	18AC	**K20**	120AC
A18	18DC	**A65**	65DC	**J24**	24AC	**L40**	240AC
A24	24DC	**J06**	6AC	**J48**	48AC		

8 TERMINAL

1[10]	Stud 10-32, threaded
2[11]	Screw 10-32
3[12]	Stud 1/4-20, threaded
4[11]	Stud M5 x 0.8, threaded
5[11]	Screw M5 x 0.8
6[12]	Stud M6, threaded
7[13]	0.250 Double Quick Connect
8	1/4" Clip Terminal
9	7/16" Clip Terminal
A[14]	Plug-In Stud
C	5/16" Clip Terminal

9 ACTUATOR COLOR & LEGEND[16,17,18]

Actuator or Visi-Color	***Marking:***			***Marking Color:***	
Color:	**I-O**	**ON-OFF**	**Dual/None**	***Single Color Rocker/Handle***	**Visi-Rocker**
White	**A**	**B**	**1**	Black	White
Black	**C**	**D**	**2**	White	n/a
Red	**F**	**G**	**3**	White	Red
Green	**H**	**J**	**4**	White	Green
Blue	**K**	**L**	**5**	White	Blue
Yellow	**M**	**N**	**6**	Black	Yellow
Gray	**P**	**Q**	**7**	Black	Gray
Orange	**R**	**S**	**8**	Black	Orange

10 MOUNTING/BARRIERS[1]

		BARRIERS
	Standard Rocker Bezel	
1	6-32 x 0.195 inches	no
2	6-32 x 0.195 inches	yes
3[19]	6-32 x 0.195 inches	yes
4	ISO M3 x 5mm	no
5	ISO M3 x 5mm	yes
6[19]	ISO M3 x 5mm	yes
	Rockerguard Bezel	
A	6-32 x 0.195 inches	no
C	6-32 x 0.195 inches	yes
E[19]	6-32 x 0.195 inches	yes
G	ISO M3 x 5mm	no
J	ISO M3 x 5mm	yes
L[19]	ISO M3 x 5mm	yes
	Push-To-Reset Bezel	
B	6-32 x 0.195 inches	no
D	6-32 x 0.195 inches	yes
F[19]	6-32 x 0.195 inches	yes
H	ISO M3 x 5mm	no
J	ISO M3 x 5mm	yes
M[19]	ISO M3 x 5mm	yes

11 AGENCY APPROVAL

C	UL Recognized, CSA Accepted
D	VDE Certified, UL Recognized, CSA Accepted
E	TUV Certified, UL Recognized, CSA Accepted
H	UL489 Construction: VDE Certified, UL Recognized, CSA Accepted
I	UL Rec. STD 1077, UL Rec. 1500 (ignition protected), CSA Accepted
L	UL489 Construction: UL Recognized, CSA Accepted
R	UL489 Construction: TUV Certified, UL Recognized, CSA Accepted

C	C	3	–	B	0	–	14	–	450	–	1	2	A	–	K	G
1 Series	2 Actuator	3 Poles		4 Circuit	5 Aux/Alarm Switch		6 Frequency & Delay		7 Current Rating		8 Terminal	9 Actuator Color	10 Mounting/ Barriers		11 Max. App. Rating	12 Agency Approval

1 SERIES
C

2 ACTUATOR[1]
Two Color Visi-Rocker

C	Indicate ON, vertical legend
D	Indicate ON, horizontal legend
F	Indicate OFF, vertical legend
G	Indicate OFF, horizontal legend

Single color

J	*Vertical legend*
K	Horizontal legend

ROCKER STYLE DESCRIPTIONS

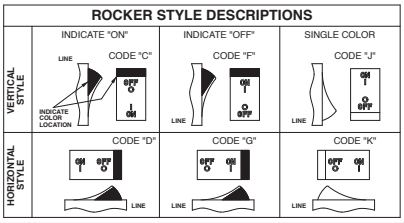

3 POLES[1]

1	One	**2**	Two	**3**	Three

4 CIRCUIT
B Series Trip (current)

5 AUXILIARY/ALARM SWITCH[2]

0	without Aux Switch	**6**	S.P.S.T., 0.139 Solder Lug
2	S.P.D.T., 0.110 Q.C. Terminal	**8**	S.P.S.T., 0.187 Q.C. Terminal
3	S.P.D.T., 0.139 Solder Lug	**9**	S.P.D.T., 0.187 Q.C. Terminal
4	S.P.D.T., 0.110 Q.C. Terminal (Gold Contacts)		

6 FREQUENCY & DELAY

11	DC Ultra Short	**26**	50/60Hz Long
12	DC Short	**42**[8]	50/60Hz Short, Hi-Inrush
14	DC Medium	**44**[8]	50/60Hz Medium, Hi-Inrush
16	DC Long	**46**[8]	50/60Hz Long, Hi-Inrush
21	50/60Hz Ultra Short	**52**[8]	DC Short, Hi-Inrush
22	50/60Hz Short	**54**[8]	DC Medium, Hi-Inrush
24	50/60Hz Medium	**56**	DC Long, Hi-Inrush

Notes:
1 Multi-pole breakers have all breakers identical except when specifying Aux. switch and/ or mixed poles, and have one rocker per breaker.
2 On multi-pole breakers, one aux. switch is supplied, mounted in the extreme right pole.
3 Available up to 50 amps maximum.
4 Current ratings 71 - 100 with VDE approvals are available up to two poles maximum.
5 Terminal Code 1 available to 60 amps maximum.
6 Terminal Codes 2, 4, 5 & C available to 50 amps maximum.
7 Terminal Codes 3, 6, 9 & A available to 100 amps maximum.
8 Terminal Codes 8, 9 & C are not VDE approved.
9 Color shown is visi and legend with remainder of rocker black
10 Dual = ON-OFF/I-O legend on actuator.
11 VDE and TUV approval requires Dual (I-O, ON-OFF) markings on rocker.
12 Rockerguard available with all actuator codes.
13 Barriers supplied on multi-pole units only.
14 2 & 3 pole circuit breakers required for 120/240 AC rating.

7 CURRENT RATING (AMPERES)[4]

CODE	AMPERES	CODE	AMPERES	CODE	AMPERES	CODE	AMPERES
210	0.100	**295**	0.950	**470**	7.000	**618**	18.000
215	0.150	**410**	1.000	**475**	7.500	**620**	20.000
220	0.200	**512**	1.250	**480**	8.000	**622**	22.000
225	0.250	**415**	1.500	**485**	8.500	**624**	24.000
230	0.300	**517**	1.750	**490**	9.000	**625**	25.000
235	0.350	**420**	2.000	**495**	9.500	**630**	30.000
240	0.400	**522**	2.250	**610**	10.000	**635**	35.000
245	0.450	**425**	2.500	**710**	10.500	**640**	40.000
250	0.500	**527**	2.750	**611**	11.000	**650**	50.000
255	0.550	**430**	3.000	**711**	11.500	**660**	60.000
260	0.600	**435**	3.500	**612**	12.000	**670**	70.000
265	0.650	**440**	4.000	**712**	12.500	**680**	80.000
270	0.700	**445**	4.500	**613**	13.000	**685**	85.000
275	0.750	**450**	5.000	**614**	14.000	**690**	90.000
280	0.800	**455**	5.500	**615**	15.000	**695**	95.000
285	0.850	**460**	6.000	**616**	16.000	**100**	100.000
290	0.900	**465**	6.500	**617**	17.000		

8 TERMINAL

1[5]	Stud 10-32, threaded	**6**[7]	Stud M6, threaded
2[6]	Screw 10-32 w/saddle & washer clamps	**8**[8]	1/4" Clip Terminal
		9[7,8]	7/16" Clip Terminal
3[7]	Stud 1/4-20, threaded	**A**[7,8]	Plug-In Stud
4[6]	Stud M5 x 0.8, threaded	**C**[6,8]	5/16" Clip Terminal
5[6]	Screw M5 x 0.8 w/saddle & washer clamps		

9 ACTUATOR COLOR & LEGEND[11]

Actuator or Visi-Color 9 — ***Marking:*** — ***Marking Color:***

Color:	ON-OFF	Dual[10]	Single Color Rocker/Handle	Visi-Rocker
White	**B**	**1**	Black	White
Black	**D**	**2**	White	n/a
Red	**G**	**3**	White	Red
Green	**J**	**4**	White	Green
Blue	**L**	**5**	White	Blue
Yellow	**N**	**6**	Black	Yellow
Gray	**Q**	**7**	Black	Gray
Orange	**S**	**8**	Black	Orange

10 MOUNTING/BARRIERS[12]

		BARRIERS[13]
	Standard Rocker Bezel	
	Threaded Insert, 2 per pole	
A	6-32 x 0.195 inches	yes
C	ISO M3 x 5mm	yes
	Rockerguard Bezel	
	Threaded Insert, 2 per pole	
B	6-32 x 0.195 inches	yes
D	ISO M3 x 5mm	yes

11 MAXIMUM APPLICATION RATING

A	65 DC
B	125 DC
C	120/240 AC[14]
D	240 AC
F	277 AC
K	120 AC
M	80 DC

12 AGENCY APPROVAL

A	without approvals
F	UL 489 Listed, CSA Certified, & VDE Certified
G	UL 489 Listed & CSA Certified
J	UL489 Listed, CSA Certified & TUV Certified

C	1	2	–	B	0	–	10	–	450	–	1	2	1	–	E
1 Series	2 Actuator	3 Poles		4 Circuit	5 Aux/Alarm Switch		6 Frequency & Delay		7 Current Rating		8 Terminal	9 Actuator Color	10 Mounting/ Barriers		11 Agency Approval

1 SERIES
C

2 ACTUATOR[1]
Two Color Visi-Rocker
1 Indicate OFF, vertical legend
2 Indicate OFF, horizontal legend
Single color
3 Vertical legend
4 Horizontal legend
Push-To-Reset, Visi-Rocker
5 Indicate OFF, vertical legend
6 Indicate OFF, horizontal legend
Push-To-Reset , Single color
7 Vertical legend
8 Horizontal legend

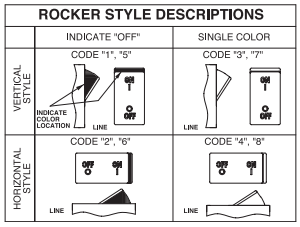

3 POLES[2]
1 One **2** Two **3** Three

4 CIRCUIT
A[3] Switch Only (No Coil)
B Series Trip (Current)
C Series Trip (Voltage)
D[4] Shunt Trip (Current)
E[4] Shunt Trip (Voltage)
F[4] Relay Trip (Current)
G[4] Relay Trip (Voltage)
H[4,5] Dual Coil with Shunt Trip Voltage Coil
K[4,5] Dual Coil with Relay Trip Voltage Coil

5 AUXILIARY/ALARM SWITCH[6]
0 without Aux Switch
2 S.P.D.T., 0.110 Q.C. Terminal
3 S.P.D.T., 0.139 Solder Lug
4 S.P.D.T., 0.110 Q.C. Terminal (Gold Contacts)
6 S.P.S.T., 0.139 Solder Lug
8 S.P.S.T., 0.187 Q.C. Terminal
9 S.P.D.T., 0.187 Q.C. Terminal

6 FREQUENCY & DELAY
03 DC 50/60Hz, Switch Only
10[7] DC Instantaneous
11 DC Ultra Short
12 DC Short
14 DC Medium
16 DC Long
20[7] 50/60Hz Instantaneous
21 50/60Hz Ultra Short
22 50/60Hz Short
24 50/60Hz Medium
26 50/60Hz Long
30 DC 50/60Hz Instantaneous
31 DC 50/60Hz Ultra Short
32 DC 50/60Hz Short
34 DC 50/60Hz Medium
36 DC 50/60Hz Long
42[8] 50/60Hz Short, Hi-Inrush
44[8] 50/60Hz Medium, Hi-Inrush
46[8] 50/60Hz Long, Hi-Inrush
52[8] DC Short, Hi-Inrush
54[8] DC Medium, Hi-Inrush
56[8] DC Long, Hi-Inrush

7 CURRENT RATING (AMPERES)[9]

CODE	AMPERES	CODE	AMPERES	CODE	AMPERES	CODE	AMPERES
020	0.020	**235**	0.350	**430**	3.000	**614**	14.000
025	0.025	**240**	0.400	**435**	3.500	**615**	15.000
030	0.030	**245**	0.450	**440**	4.000	**616**	16.000
035	0.035	**250**	0.500	**445**	4.500	**617**	17.000
040	0.040	**255**	0.550	**450**	5.000	**618**	18.000
045	0.045	**260**	0.600	**455**	5.500	**620**	20.000
050	0.050	**265**	0.650	**460**	6.000	**622**	22.000
055	0.055	**270**	0.700	**465**	6.500	**624**	24.000
060	0.060	**275**	0.750	**470**	7.000	**625**	25.000
065	0.065	**280**	0.800	**475**	7.500	**630**	30.000
070	0.070	**285**	0.850	**480**	8.000	**635**	35.000
075	0.075	**290**	0.900	**485**	8.500	**640**	40.000
080	0.080	**295**	0.950	**490**	9.000	**650**	50.000
085	0.085	**410**	1.000	**495**	9.500	**660**[9]	60.000
090	0.090	**512**	1.250	**610**	10.000	**670**[9]	70.000
095	0.095	**415**	1.500	**710**	10.500	**680**[9]	80.000
210	0.100	**517**	1.750	**611**	11.000	**685**[9]	85.000
215	0.150	**420**	2.000	**711**	11.500	**690**[9]	90.000
220	0.200	**522**	2.250	**612**	12.000	**695**[9]	95.000
225	0.250	**425**	2.500	**712**	12.500	**810**[9]	100.000
230	0.300	**527**	2.750	**613**	13.000		

VOLTAGE COIL (NORMINAL RATED VOLTAGE)[7]

CODE	RATING	CODE	RATING	CODE	RATING	CODE	RATING
A06	6DC	**A32**	32DC	**J12**	12AC	**J65**	65AC
A12	12DC	**A48**	48DC	**J18**	18AC	**K20**	120AC
A18	18DC	**A65**	65DC	**J24**	24AC	**L40**	240AC
A24	24DC	**J06**	6AC	**J48**	48AC		

8 TERMINAL
1[10] Stud 10-32, threaded
2[11] Screw 10-32
3[12] Stud 1/4-20, threaded
4[11] Stud M5 x 0.8, threaded
5[11] Screw M5 x 0.8
6[12] Stud M6, threaded
7[13] 0.250 Double Quick Connect
8 1/4" Clip Terminal
9 7/16" Clip Terminal
A[14] Plug-In Stud
C 5/16" Clip Terminal

9 ACTUATOR COLOR & LEGEND[16,17,18]

Actuator or Visi-Color	***Marking:***			***Marking Color:***	
				Single Color	
Color:	**I-O**	**ON-OFF**	**Dual/None**	**Rocker/Handle**	**Visi-Rocker**
White	**A**	**B**	**1**	Black	White
Black	**C**	**D**	**2**	White	n/a
Red	**F**	**G**	**3**	White	Red
Green	**H**	**J**	**4**	White	Green
Blue	**K**	**L**	**5**	White	Blue
Yellow	**M**	**N**	**6**	Black	Yellow
Gray	**P**	**Q**	**7**	Black	Gray
Orange	**R**	**S**	**8**	Black	Orange

10 MOUNTING/BARRIERS[1]

	Standard Rocker Bezel	BARRIERS	VOLTAGE
1	6-32 x 0.195 inches	no	< 300
2	6-32 x 0.195 inches	yes	< 300
3[19]	6-32 x 0.195 inches	yes	≥ 300
4	ISO M3 x 5mm	no	< 300
5	ISO M3 x 5mm	yes	< 300
6[19]	ISO M3 x 5mm	yes	≥ 300
	Recessed Off Rocker		
7	6-32 x 0.195 inches	no	< 300
8	6-32 x 0.195 inches	yes	< 300
9	6-32 x 0.195 inches	yes	≥ 300
A	ISO M3 x 5mm	no	< 300
C	ISO M3 x 5mm	yes	< 300
E	ISO M3 x 5mm	yes	≥ 300
	Push-To-Reset Bezel		
B	6-32 x 0.195 inches	no	< 300
D	6-32 x 0.195 inches	yes	< 300
F[19]	6-32 x 0.195 inches	yes	≥ 300
H	ISO M3 x 5mm	no	< 300
J	ISO M3 x 5mm	yes	< 300
M[19]	ISO M3 x 5mm	yes	≥ 300

11 AGENCY APPROVAL
C UL Recognized, CSA Accepted
E TUV Certified, UL Recognized, CSA Accepted
I UL Rec. STD 1077, UL Rec. 1500 (ignition protected), CSA Accepted
L UL489 Construction: UL Recognized, CSA Accepted
R UL489 Construction: TUV Certified, UL Recognized, CSA Accepted

Notes:
1 Push-to-reset actuators have OFF portion of rocker shrouded.
2 Multi-pole breakers have all poles identical except when specifying Aux. switch and/or mixed poles, and have one rocker per breaker. Rocker location as viewed from front panel: 2 pole – left pole; 3 pole – center pole.
3 Switch Only circuits, rated up to 50 amps and 3 poles, and only available with VDE Certification when tied to a protected pole (Circuit Code B, C, D or H.). For .02 to 30 amps, select Current Code 630. For 35 - 50 amps, select Current Code 650. For 55-70 amps, select Current Code 670. For 75-100 amps, select Current Code 810.
4 Circuit Codes D,E,F,G,H & K available with Terminal Codes 1,2,4 & 5 only. Circuit Codes D,F,H & K available up to 50 amps maximum Current Rating.
5 Consult factory for available Dual Coil options, as special catalog number is required. Dual Coil Voltage Coils with Shunt Trip Construction trip instantaneously on line voltage. Dual Coil Voltage Coils require 30VA minimum power to trip instantaneously and are rated for intermittent duty only.
6 Auxiliary Switch available with Series Trip and Switch Only circuits. On multi-pole breakers, one aux. switch is supplied, mounted in the extreme right pole.Auxilary switch codes 2,3 & 4 are VDE approved.
7 Voltage coils not rated for continuous duty. Available only with delay codes 10 and 20.
8 Available with Circuit Codes B & D only, and up to 50 amps maximum.
9 Current ratings 60-70 are available up to four poles maximum. Current ratings 71 - 100 are available up to two poles maximum.
10 Terminal Code 1 available to 60 amps maximum.
11 Terminal Codes 2,4,5 & C available to 50 amps maximum.
12 Terminal Codes 3,6 & 9 available to 100 amps maximum.
13 Terminal Code 7 available to 25 amps maximum.
14 Terminal Code A available to 100 amps maximum.
15 Terminal Codes 7,8,9 & C are not VDE approved.
16 Color shown is visi & legend with remainder of rocker black. Dual = ON-OFF/I-O legend.
17 Legend on Push-to-reset bezel/shroud is white with single color actuator codes 7 & 8. Legend on Push-to-reset bezel/shroud matches visi-color of rocker with actuator codes 5 & 6.
18 VDE/TUV approval requires Dual (I-O, ON-OFF) or I-O markings on rocker.
19 VDE/TUV: 30 amps max.; UL/CSA: 50 amps max.; Available in 2 & 3 poles only and limited to AC Delays. "General Purpose amps" not rated for "full load amps" or to be used in applications with a motor.
20 Recessed "OFF SIDE" available with actuator codes 1,2,3&4. Legends on rocker are available in ink stamping only.

C	1	2	—	B	0	—	14	—	450	—	1	2	A	—	K	G
1 Series	2 Actuator	3 Poles		4 Circuit	5 Aux/Alarm Switch		6 Frequency & Delay		7 Current Rating		8 Terminal	9 Actuator Color	10 Mounting/ Barriers		11 Max. App. Rating	12 Agency Approval

1 SERIES
C

2 ACTUATOR[1]
Two Color Visi-Rocker
1 Indicate OFF, vertical legend
2 Indicate OFF, horizontal legend
Single color
3 Vertical legend
4 Horizontal legend
Push-To-Reset, Visi-Rocker
5 Indicate OFF, vertical legend
6 Indicate OFF, horizontal legend
Push-To-Reset , Single color
7 Vertical legend
8 Horizontal legend

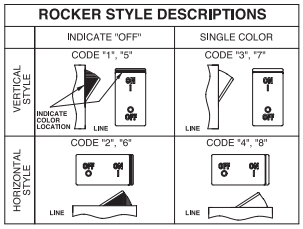

3 POLES[2]
1 One **2** Two **3** Three

4 CIRCUIT
B Series Trip (current)

5 AUXILIARY/ALARM SWITCH[2]
0 without Aux Switch
2 S.P.D.T., 0.110 Q.C. Terminal
3 S.P.D.T., 0.139 Solder Lug
4 S.P.D.T., 0.110 Q.C. Terminal (Gold Contacts)
6 S.P.S.T., 0.139 Solder Lug
8 S.P.S.T., 0.187 Q.C. Terminal
9 S.P.D.T., 0.187 Q.C. Terminal

6 FREQUENCY & DELAY
11 DC Ultra Short
12 DC Short
14 DC Medium
16 DC Long
21 50/60Hz Ultra Short
22 50/60Hz Short
24 50/60Hz Medium
26 50/60Hz Long
42[4] 50/60Hz Short, Hi-Inrush
44[4] 50/60Hz Medium, Hi-Inrush
46[4] 50/60Hz Long, Hi-Inrush
52[4] DC Short, Hi-Inrush
54[4] DC Medium, Hi-Inrush
56[4] DC Long, Hi-Inrush

Notes:
1 Push-to-reset actuators have OFF portion of rocker shrouded.
2 Multi-pole breakers have all breakers identical except when specifying Aux. switch and/ or mixed poles, and have one rocker per breaker.
3 On multi-pole breakers, one aux. switch is supplied, mounted in the extreme right pole.
4 Available up to 50 amps maximum.
5 Current ratings 71 - 100 with VDE approvals are available up to two poles maximum.
6 Terminal Code 1 available to 60 amps maximum.
7 Terminal Codes 2, 4, 5 & C available to 50 amps maximum.
8 Terminal Codes 3, 6, 9 & A available to 100 amps maximum.
9 Terminal Codes 8, 9 & C are not VDE approved.
10 Color shown is visi and legend with remainder of rocker black
11 Dual = ON-OFF/I-O legend on actuator.
12 VDE and TUV approval requires Dual (I-O, ON-OFF) markings on rocker.
13 Legend on push-to-reset bezel/shroud is white when single color rocker is ordered. Legend on push-to-reset bezel/shroud matches visi-color of rocker with actuator codes 5 & 6.
14 Recessed "OFF-SIDE" available with actuator codes 1, 2, 3, & 4. Legends on rocker are available in ink stamping only.
15 Barriers supplied on multi-pole units only.
16 2 & 3 pole circuit breakers required for 120/240 AC rating.

7 CURRENT RATING (AMPERES)[5]

CODE	AMPERES	CODE	AMPERES	CODE	AMPERES	CODE	AMPERES
210	0.100	**295**	0.950	**470**	7.000	**618**	18.000
215	0.150	**410**	1.000	**475**	7.500	**620**	20.000
220	0.200	**512**	1.250	**480**	8.000	**622**	22.000
225	0.250	**415**	1.500	**485**	8.500	**624**	24.000
230	0.300	**517**	1.750	**490**	9.000	**625**	25.000
235	0.350	**420**	2.000	**495**	9.500	**630**	30.000
240	0.400	**522**	2.250	**610**	10.000	**635**	35.000
245	0.450	**425**	2.500	**710**	10.500	**640**	40.000
250	0.500	**527**	2.750	**611**	11.000	**650**	50.000
255	0.550	**430**	3.000	**711**	11.500	**660**	60.000
260	0.600	**435**	3.500	**612**	12.000	**670**	70.000
265	0.650	**440**	4.000	**712**	12.500	**680**	80.000
270	0.700	**445**	4.500	**613**	13.000	**685**	85.000
275	0.750	**450**	5.000	**614**	14.000	**690**	90.000
280	0.800	**455**	5.500	**615**	15.000	**695**	95.000
285	0.850	**460**	6.000	**616**	16.000	**100**	100.000
290	0.900	**465**	6.500	**617**	17.000		

8 TERMINAL
1[6] Stud 10-32, threaded .625 long
2[7] Screw 10-32 w/saddle & washer clamps
3[8] Stud 1/4-20, threaded .625 long
4[7] Stud M5 x 0.8, threaded .625 long
5[7] Screw M5 x 0.8 w/saddle & washer clamps
6[8] Stud M6, threaded 17mm long
8[9] 1/4" Clip Terminal
9[8,9] 7/16" Clip Terminal
A[8,9] Plug-In Stud
C[7,9] 5/16" Clip Terminal

9 ACTUATOR COLOR & LEGEND[12]

Actuator or Visi-Color 9	***Marking:***		***Marking Color:***	
Color:	**ON-OFF**	**Dual**[11]	***Single Color Rocker/Handle***	**Visi-Rocker**
White	**B**	**1**	Black	White
Black	**D**	**2**	White	n/a
Red	**G**	**3**	White	Red
Green	**J**	**4**	White	Green
Blue	**L**	**5**	White	Blue
Yellow	**N**	**6**	Black	Yellow
Gray	**Q**	**7**	Black	Gray
Orange	**S**	**8**	Black	Orange

10 MOUNTING/BARRIERS[12]

		BARRIERS[15]
	Standard Rocker Bezel	
	Threaded Insert, 2 per pole	
A	6-32 x 0.195 inches	yes
C	ISO M3 x 5mm	yes
	Recessed Off Rocker[14]	
	Threaded Insert, 2 per pole	
E	6-32 x 0.195 inches	yes
F	ISO M3 x 5mm	yes
	Push-To-Reset Bezel	
	Threaded Insert, 2 per pole	
B	6-32 x 0.195 inches	yes
D	ISO M3 x 5mm	yes

11 MAXIMUM APPLICATION RATING
A 65 DC
B 125 DC
C 120/240 AC[16]
D 240 AC
F 277 AC
K 120 AC
M 80 DC

12 AGENCY APPROVAL
A without approvals
G UL 489 Listed & CSA Certified
J UL489 Listed, CSA Certified & TUV Certified

TERMINAL			RATING (AMPS)			
DESCRIPTION	CODE	DIMENSIONAL DETAIL	25	50	100	80
#10-32 STUD	1	.723[18.36] / .150 [3.81]	■	■		
M5 STUD	4	.688[17.48] / .150 [3.81]	■	■		
#1/4-20 STUD	3	.723[18.36] / .150 [3.81]	■	■	■	
M6 STUD	6					
#1/4-20 STUD	3	.675 [17.15] / .235 [5.97]				■
M6 STUD	6	.669 [16.99] / .264 [6.71]				■
#10-32 SCREW	2	±.015 ±.38 .150 [3.81]	■	■		
M-5 SCREW	5					

TERMINAL			RATING (AMPS)			
DESCRIPTION	CODE	DIMENSIONAL DETAIL	25	50	100	80
.250 DOUBLE Q.C.	7	.400 [10.16] / .820 [20.83] / .173 [4.39] / .320 [8.13] / .250 [6.35]	■			
7/16" CLIP TERMINALS	9	.437 DIA [Ø11.10] COMPONENT DIA / .644[16.36] / .901[22.89]	■	■		
PUSH-IN STUD	A	.960 [24.38] / +.002 -.000 / +.05 -.00 .311 DIA [Ø7.90] / .558 [14.17] CENTERLINE OF PUSH-IN STUD CONTACT AREA / PUSH-IN STUD MATING HOLE	■	■	■	■

NOTES: TOLERANCE ON STUD LENGTHS IS ±.031 [±.79] UNLESS OTHERWISE SPECIFIED.

AUXILIARY / ALARM SWITCH TERMINAL DETAIL[3]

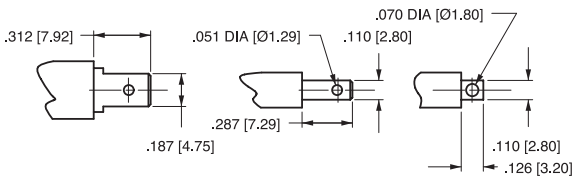

TAB (Q.C.) .187 **TAB (Q.C.) .110** **SOLDER TYPE**

TIGHTENING TORQUE SPECIFICATIONS	
THREAD SIZE	TORQUE
#6-32 [M3] MOUNTING INSERTS	7-9 IN-LBS [0.8-1.0 NM]
#10-32 & M5 THD STUDS	15-20 IN-LBS [1.7-2.3 NM]
#10-32 THD SCREW	15-20 IN-LBS [1.7-2.3 NM]
#1/4-20 & M6 THD STUDS	30-35 IN-LBS [3.4-4.0 NM]

TERMINAL HARDWARE				
TERMINAL DESCRIPTION	CODE	AGENCY APPROVAL	AMPERE RATING	HARDWARE SUPPLIED
#10-32 STUD	1	ALL	.02 - 50	LOCK WASHER - FLAT WASHER - NUT
M5 STUD	4	ALL	.02 - 50	LOCK WASHER - FLAT WASHER - NUT
#1/4-20 STUD	3	ALL	.02 - 80	LOCK WASHER - FLAT WASHER - NUT
			81 - 100	LOCK WASHER - NUT - (2)FLAT WASHER - NUT
M6 STUD	6	ALL	.02 - 80	LOCK WASHER - FLAT WASHER - NUT
			81 - 100	LOCK WASHER - NUT - (2)FLAT WASHER - NUT
#10-32 SCREW	2 & 5	UL RECOGNIZED	.02 - 50	* SADDLE CLAMP - FLAT WASHER - SCREW
		UL-489 LISTED	.02 - 50	LOCK WASHER - FLAT WASHER - SCREW
		TUV & VDE CERTIFIED	.02 - 16	* SADDLE CLAMP - FLAT WASHER - SCREW
		TUV & VDE CERTIFIED	16.1 - 50	LOCK WASHER - FLAT WASHER - SCREW

* THE SADDLE CLAMP IS FOR DIRECT WIRE CONNECTION USE. DISCARD SADDLE CLAMP IF WIRE TERMINAL LUG IS USED

Notes:
1 All dimensions are in inches [millimeters].
2 Tolerance ±.020 [.51] unless otherwise specified.
3 Available on Series Trip and Switch Only Circuits when called for on multi-pole units. Only one aux. switch is normally supplied, as viewed in mulit-pole identification scheme.

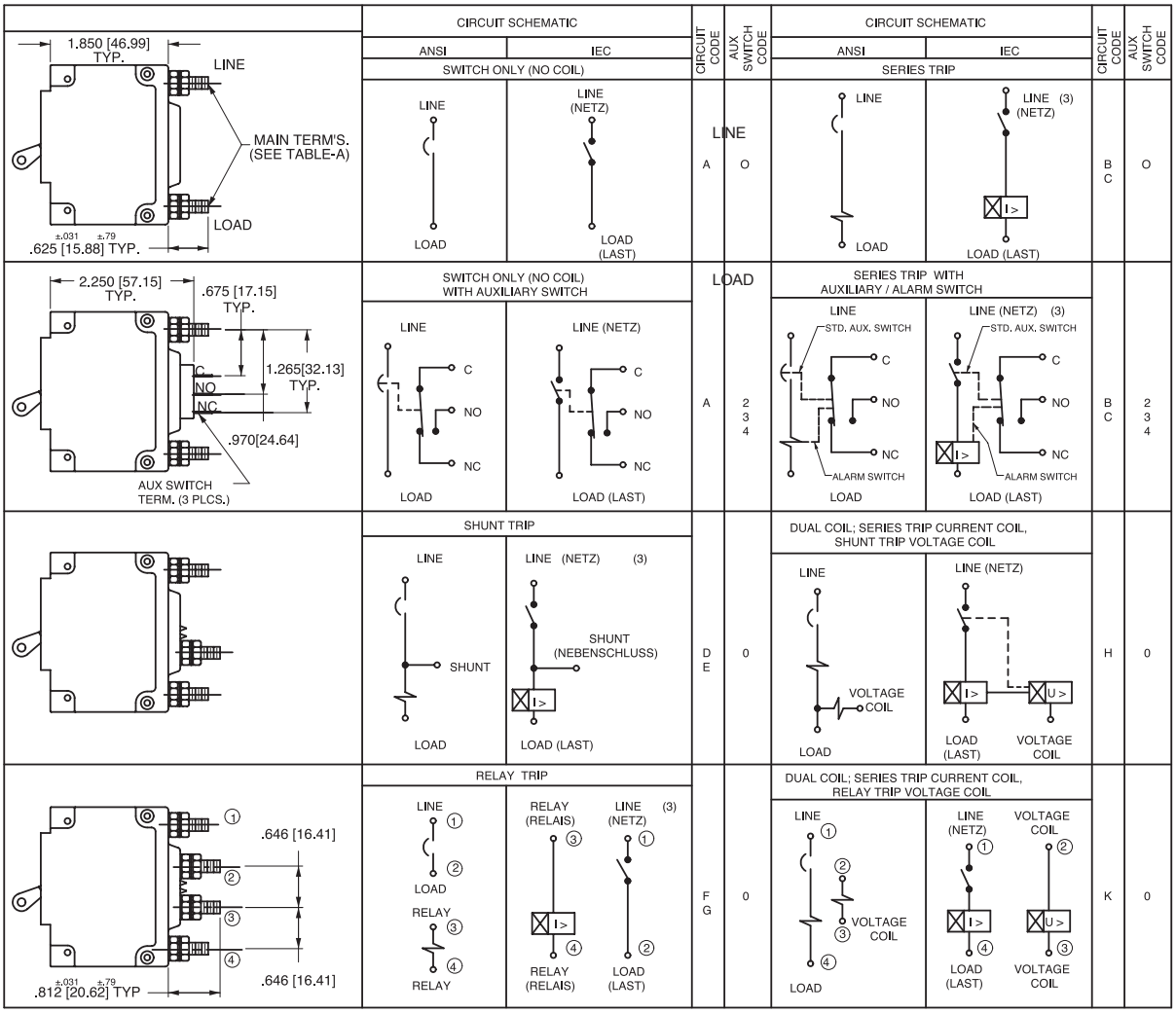

HANDLE POSITION VS. AUX/ALARM SWITCH MODE					
	STANDARD C/B		MID TRIP C/B		
CIRCUIT BREAKER MODE	HANDLE POSITION	AUX. SWITCH MODE	HANDLE POSITION	STANDARD ALARM SWITCH MODE	REVERSE ALARM SWITCH MODE[4]
OFF	30° OFF O	NC NO C	30° OFF O	NC NO C	NC NO C
ON	ON 30°	NC NO C	ON 30°	NC NO C	NC NO C
ELECTRICAL TRIP	30° OFF O	NC NO C	90°	NC NO C	NC NO C

Notes:
1 All dimensions are in inches [millimeters].
2 Tolerance ±.020 [.51] unless otherwise specified.
3 Schematic shown represents current trip circuits.
4 Available only as special catalog number.

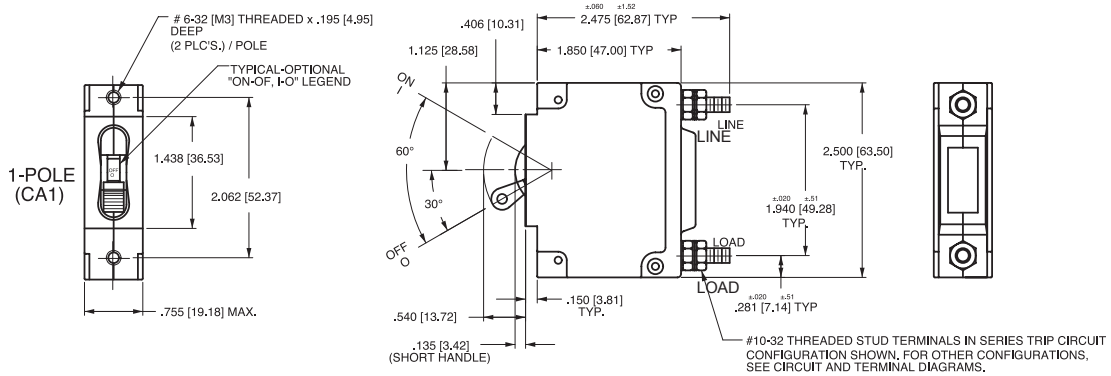

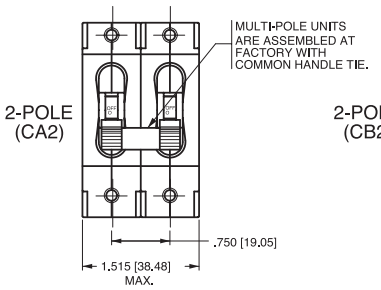

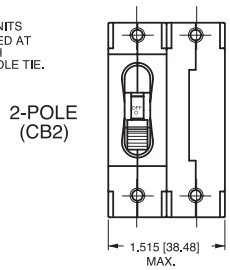

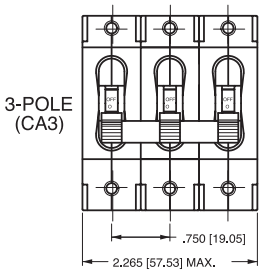

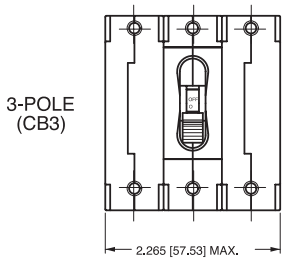

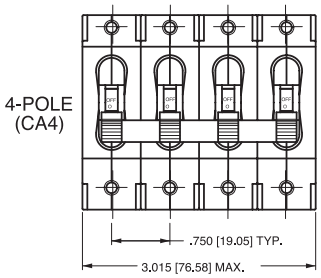

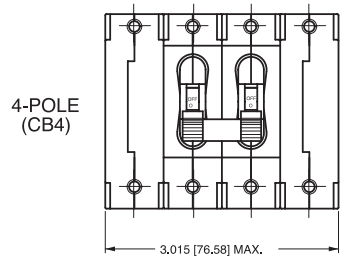

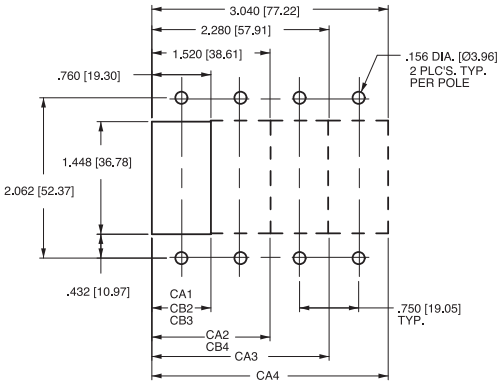

PANEL CUTOUT DETAIL

TOLERANCES ±.005 [.12]

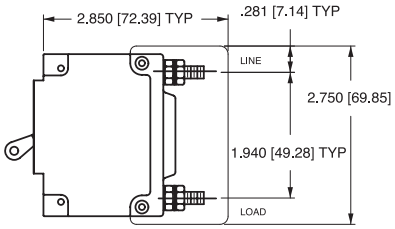

BARRIER FOR UL-RECOGNIZED MULTI-POLE BREAKERS

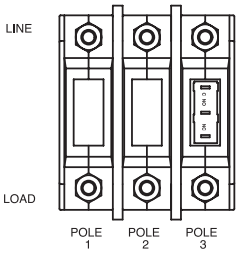

MULTI-POLE IDENTFICATION SCHEME AS VIEWED FROM TERMINAL END OF BREAKER.

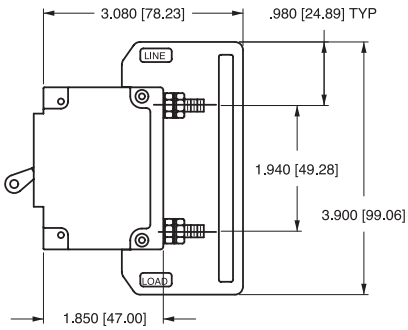

BARRIER FOR UL-489 LISTED MULTI-POLE BREAKERS

Notes:

1 All dimensions are in inches [millimeters].

2 Tolerance ±.020 [.51] unless otherwise specified.

1-POLE (CA1)

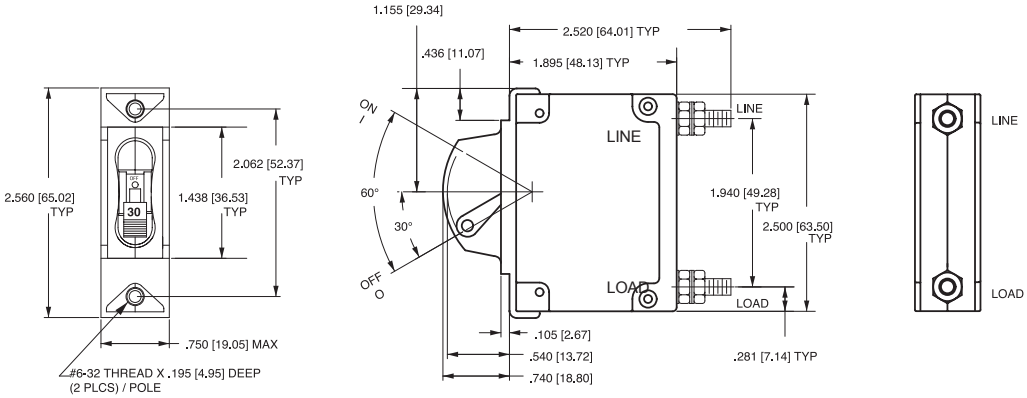

2-POLE (CA2)

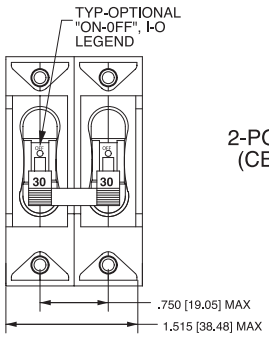

2-POLE (CB2)

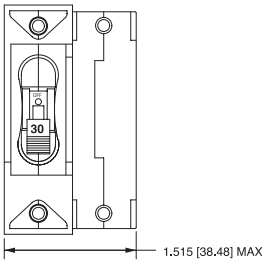

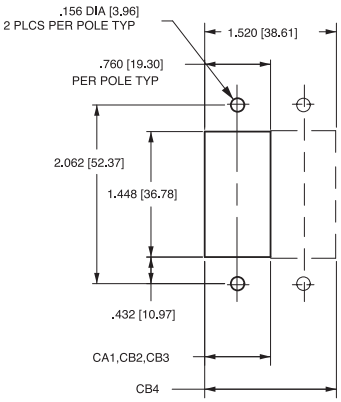

PANEL CUTOUT DETAIL

3-POLE (CB3)

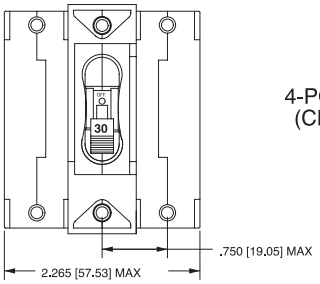

4-POLE (CB4)

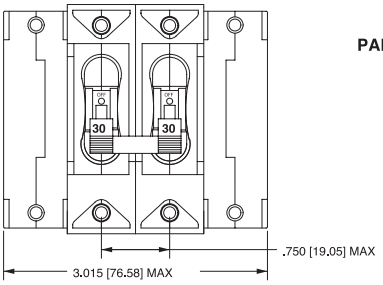

*Handleguard available as special catalog number only

SNAP-IN

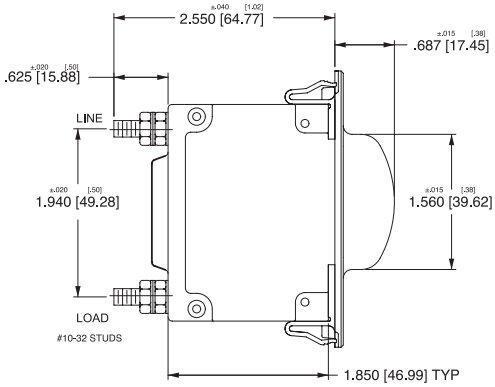

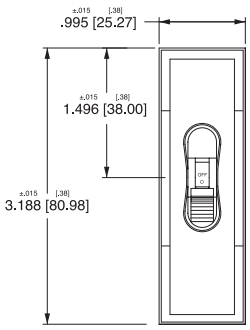

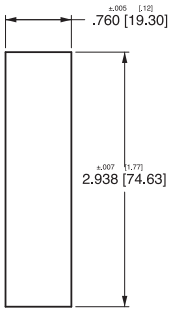

PANEL CUT-OUT
PANEL THICKNESS
0.04 TO 0.10 INCHES
[1.01] TO [2.54] INCHES

Notes:
1 All dimensions are in inches [millimeters].
2 Tolerance ±.020 [.51] unless otherwise specified.

PARALLEL POLE (CA2-P)

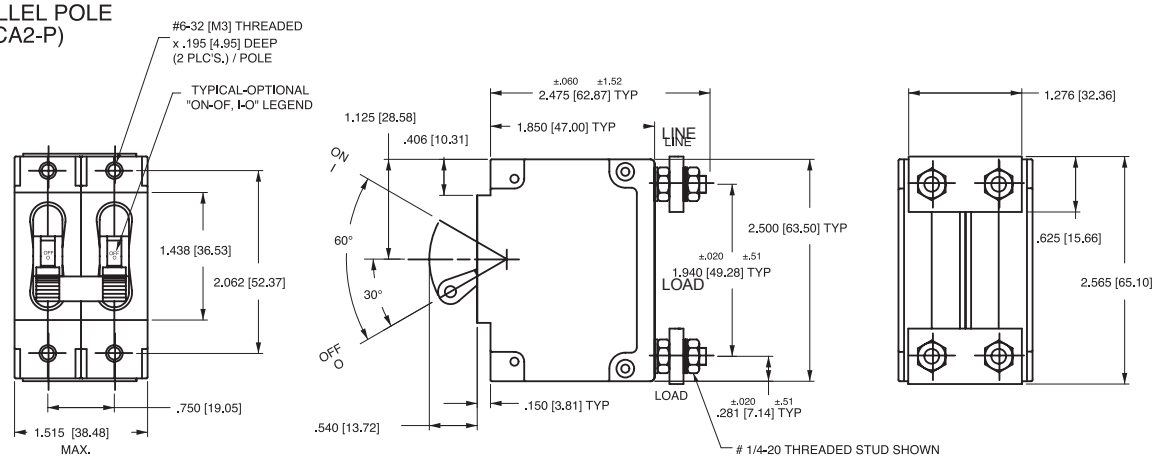

PARALLEL POLE (CA3-P)

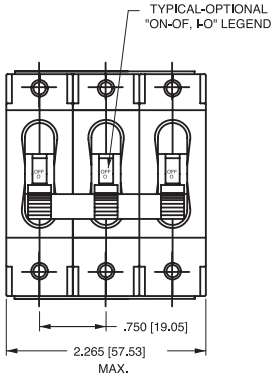

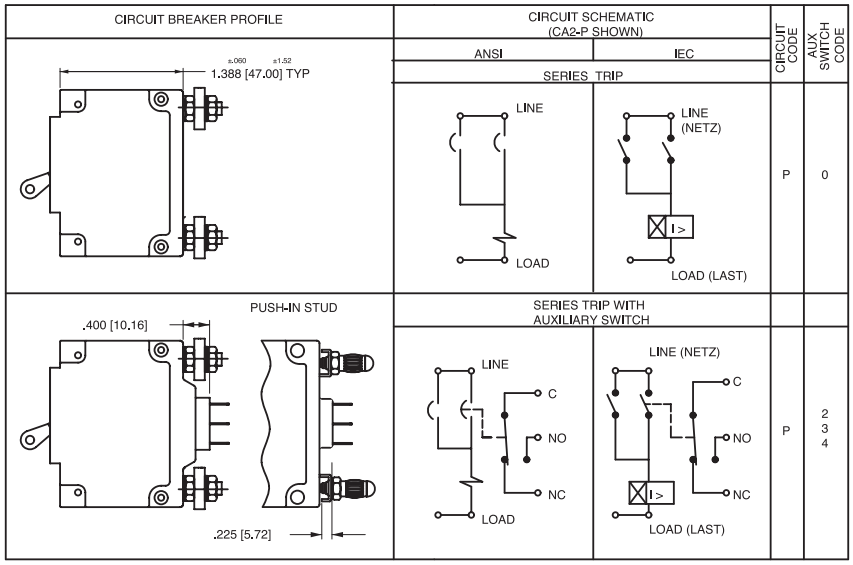

TERMINAL DETAILS

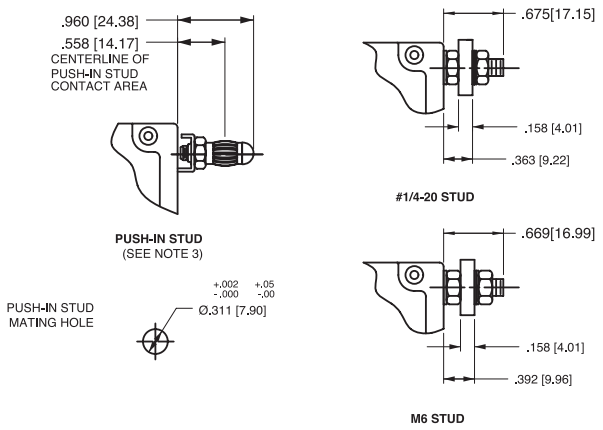

PANEL CUTOUT DETAIL

TOLERANCES ±.005 [.12]

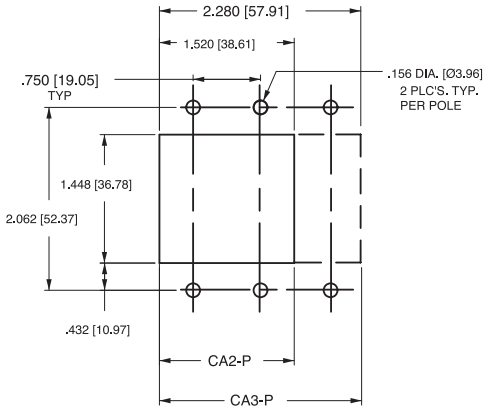

Notes:

1 All dimensions are in inches [millimeters].

2 Tolerance ±.020 [.51] unless otherwise specified.

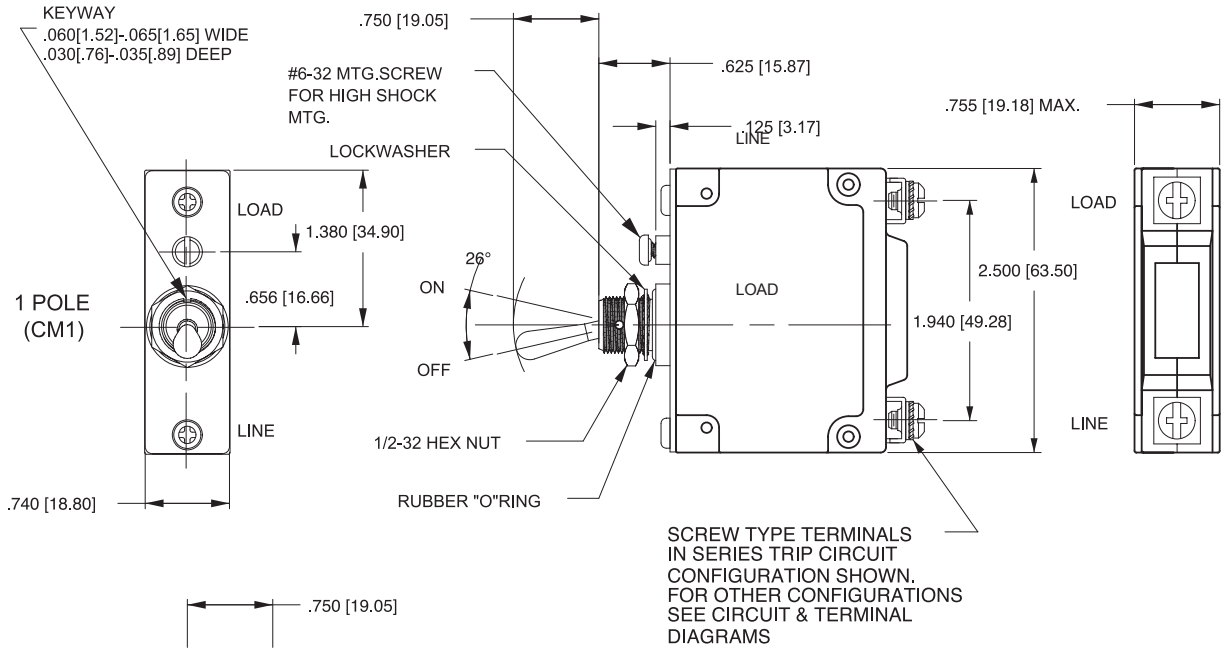

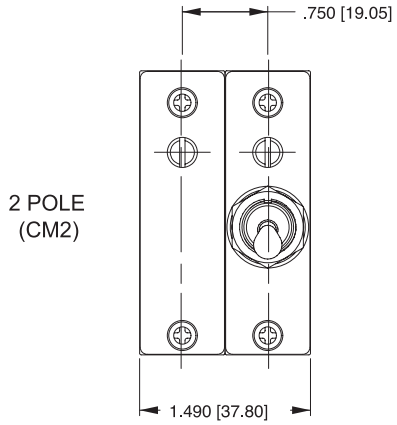

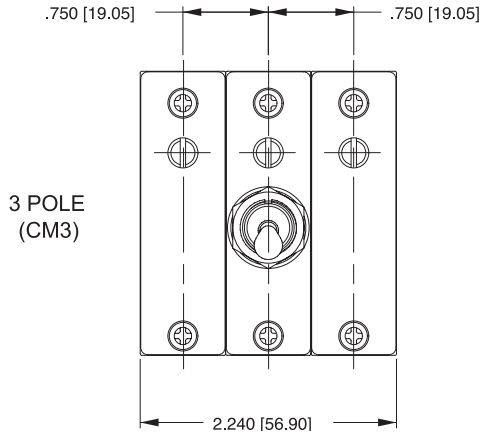

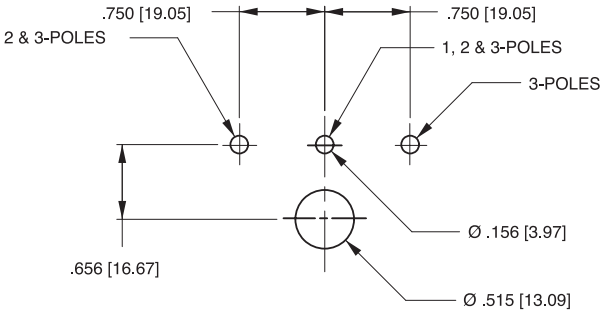

PANEL CUTOUT DETAIL
TOLERANCES ±.005[.13]

Notes:
1 All dimensions are in inches [millimeters].
2 Tolerance ±.020 [.51] unless otherwise specified.

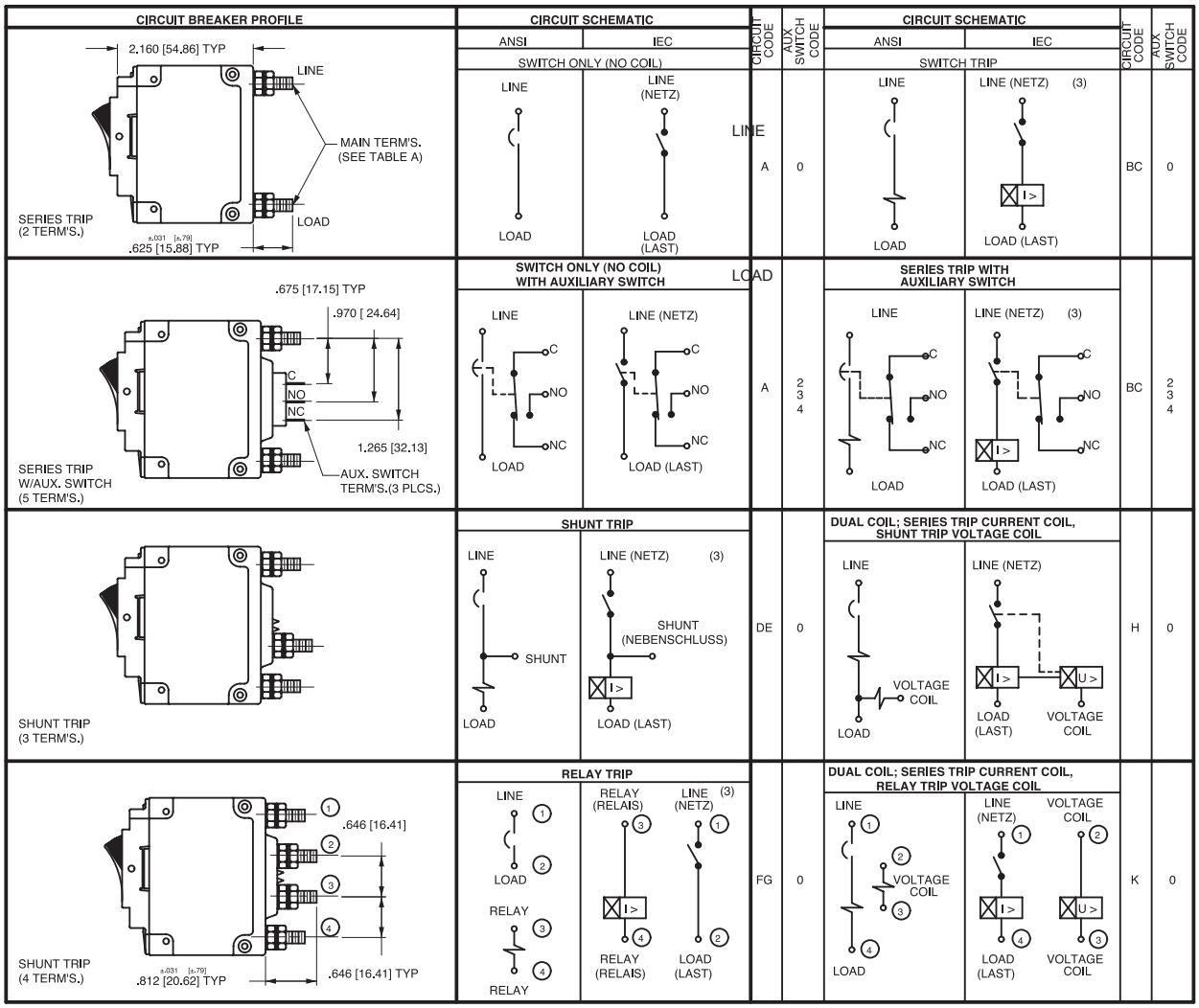

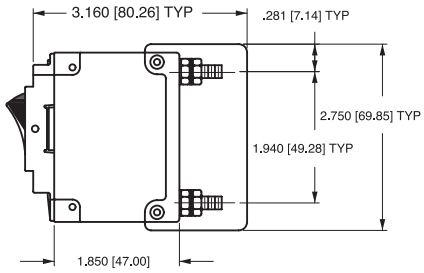

BARRIER FOR UL-RECOGNIZED MULTI-POLE BREAKERS

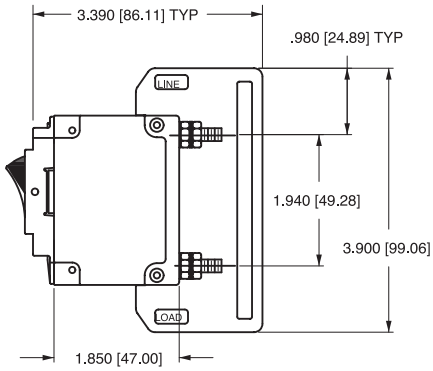

BARRIER FOR UL-489 LISTED MULTI-POLE BREAKERS

Notes:
1 All dimensions are in inches [millimeters].
2 Tolerance ±.020 [.51] unless otherwise specified.
3 Schematic shown represents current trip circuit.

INDICATE "ON"

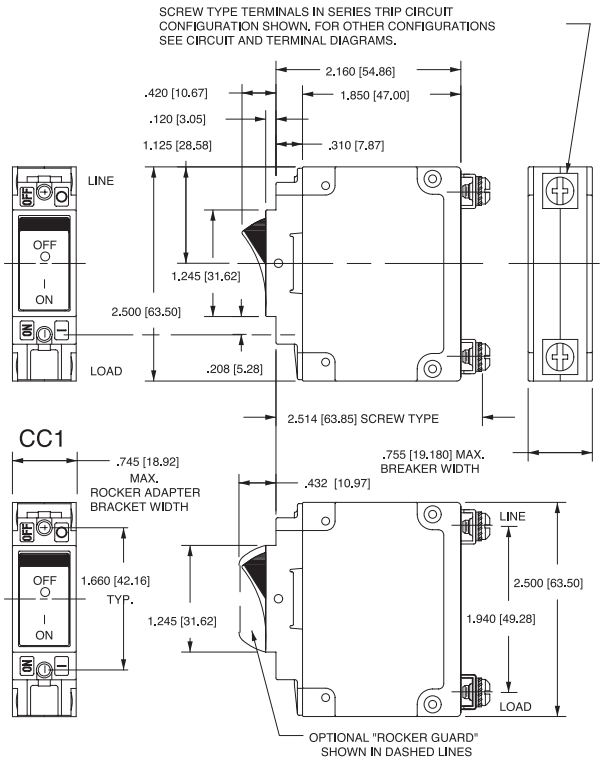

INDICATE "OFF" & SINGLE COLOR

(INDICATE "OFF" SHOWN)

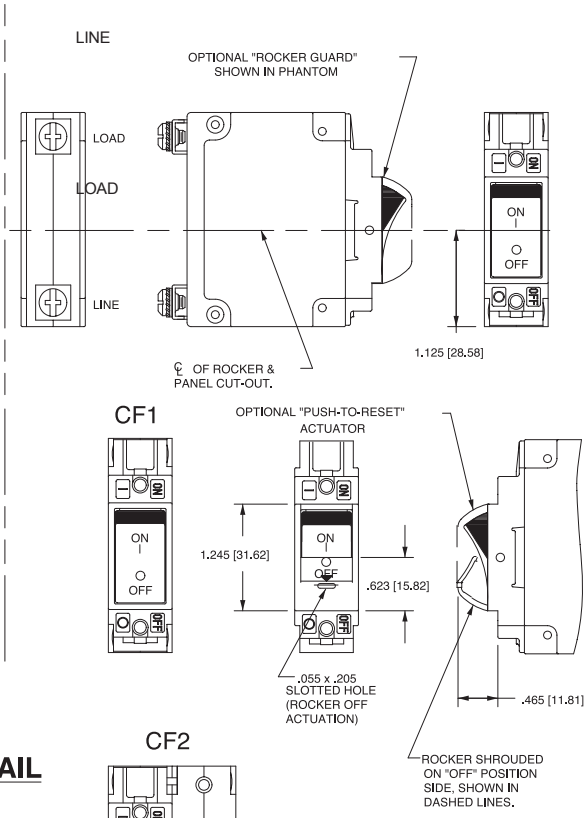

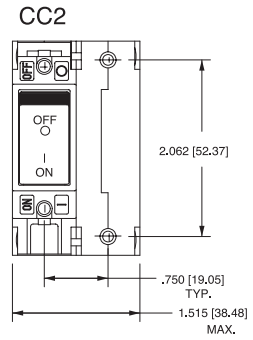

PANEL CUT-OUT DETAIL

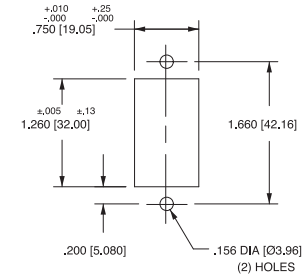

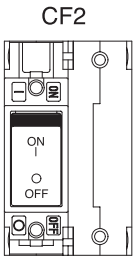

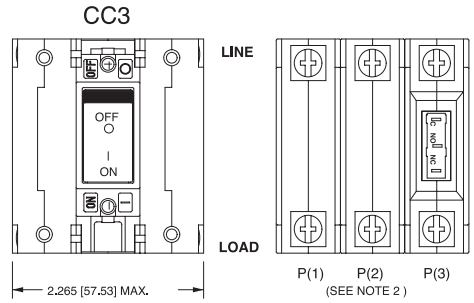

REAR VIEW OF INDICATE "ON" SERIES TRIP W/ AUX SWITCH CIRCUIT CONFIGURATION.

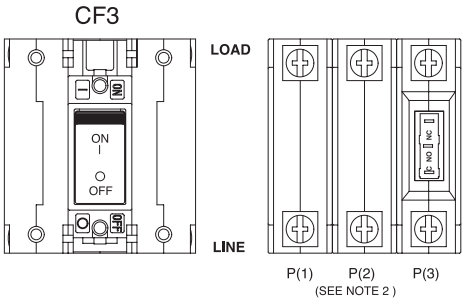

REAR VIEW OF INDICATE "OFF" SERIES TRIP W/ AUX SWITCH CIRCUIT CONFIGURATION.

Notes:

1. Dimensions apply to all variations shown. Notice that circuit breaker line and load terminal orientation on indicate OFF is opposite of indicate ON.
2. For pole orientation with horizontal legend, rotate front view clockwise 90°.
3. All dimensions are in inches [millimeters].
4. Tolerance ±.020 [.51] unless otherwise specified.

INDICATE "OFF" & SINGLE COLOR

C11

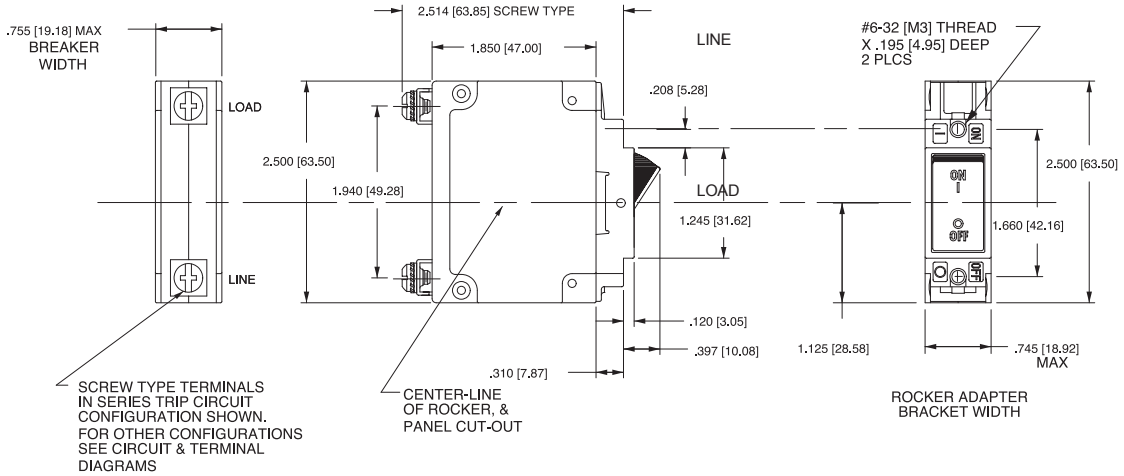

C12

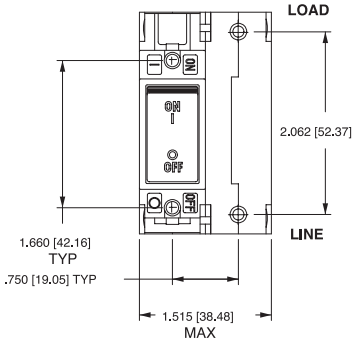

PANEL CUT-OUT DETAIL

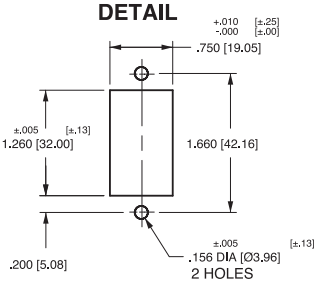

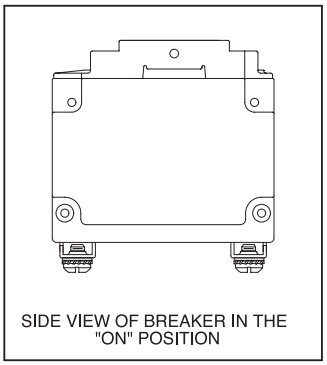

SIDE VIEW OF BREAKER IN THE "ON" POSITION

C13

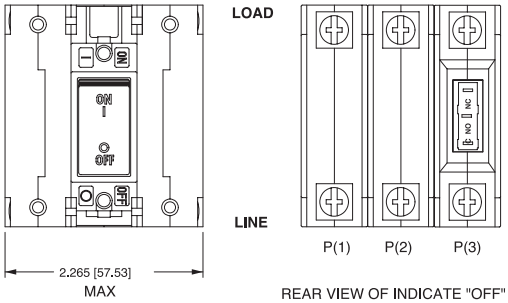

REAR VIEW OF INDICATE "OFF" SERIES TRIP W/ AUX SWITCH CIRCUIT CONFIGURATION.

PUSH-TO-RESET ACTUATOR

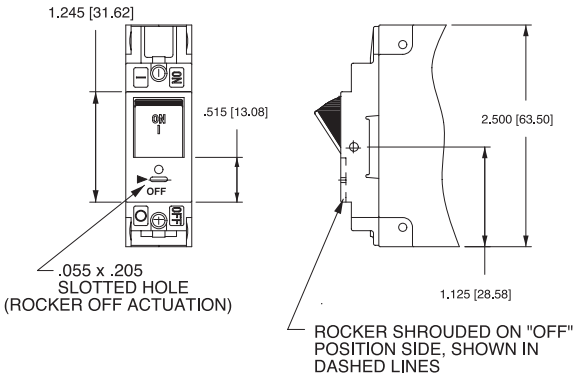

ACTUATOR SIDE VIEW
(SURFACE CONTOURS)

FLAT ROCKER

RECESSED OFF SIDE ROCKER

Notes:
1 For pole orientation with horizontal legend, rotate front view clockwise 90°.
2 All dimensions are in inches [millimeters].
3 Tolerance ±.020 [.51] unless otherwise specified.

Worldwide Headquarters

Carling Technologies, Inc.
60 Johnson Avenue • Plainville, CT 06062
Phone: (860) 793-9281 • Fax: (860) 793-9231
Email: sales@carlingtech.com • www.carlingtech.com

East Region Sales Office, CT • ersm@carlingtech.com
Midwest Region Sales Office, IL • mrsm@carlingtech.com
West Region Sales Office, CA • wrsm@carlingtech.com

Asia-Pacific Headquarters

Carling Technologies, Asia-Pacific Ltd.,
Kowloon, Hong Kong
Int + 852-2737-2277 • Fax: Int + 852-2736-9332
Email: sales@carlingtech.com.hk

Shenzhen, China • shenzhen@carlingtech.com
Shanghai, China • shanghai@carlingtech.com
Pune, India • india@carlingtech.com
Kaohsiung, Taiwan • taiwan@carlingtech.com
Yokohama, Japan • japan@carlingtech.com

Europe / Middle East / Africa Headquarters

Carling Technologies, Ltd.,
Devon, England
Int + 44 1392-364422 • Fax: Int + 44 1392-364477
Email: ltd.sales@carlingtech.com

GmbH, Germany • gmbh@carlingtech.com
SAS, France • sas@carlingtech.com

REV_CB_C_04_2013

Carling Technologies®
Innovative Designs. Powerful Solutions.