SYMBOL DEFINITION		
A DIMENSION WITHOUT AN INSPECTION REPORT SYMBOL ( ) DOES NOT REQUIRE INSPECTION. IT MAY BE CONTROLLED ON THE INDIVIDUAL COMPONENT DRAWING.	TOTAL NO OF INSPECTIONS REQUIRED	9
	LAST NO. USED	8

MISSING SYMBOLS
6

DWG STATUS					ZONE	REVISION HISTORY	AUTH	DR	APVD 1	APVD 2
DATE	STG	REV	N/P	CHG						
20DE00	R	C5	-	-		CLEARED REV COL; REDRAWN	000009	RAB	TLP	ET
27MR01	R	C6	-	-		PREVIOUS REVISION WAS 003	208115	TLD	TLD	ET
27JN01	R	C7	-	-		REVISED INSPECTION SYMBOL ON TQD	210517	RH	RH	ET
04OC02	R	03	AH	-		UPDATED PDM ATTRIBUTES	231449	BRB	BRB	FR
23FE04	R	04	-	-		ADDED NOTE (2 PLCS) & REVISED MAT'L SPEC	252097	JYD	EAR	ET
10JA05	R	04	AA	-		UPDATED PDM ATTRIBUTES	263051	EES	EES	ET
30MY07	R	04	AB	-		ADDED SYMBOL #3 TO DIM .200 AND UPDATED MATERIAL INFO	401546	EFS	JAA	TP

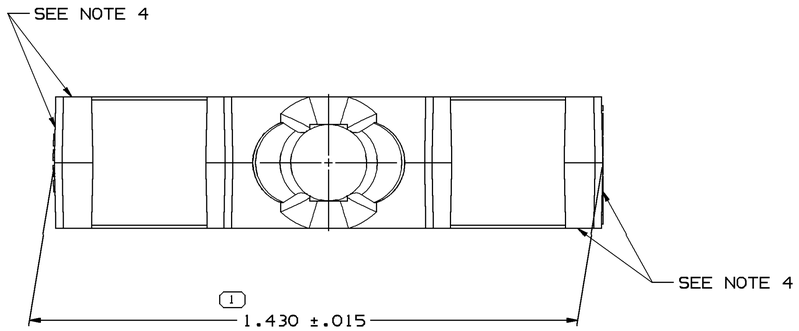

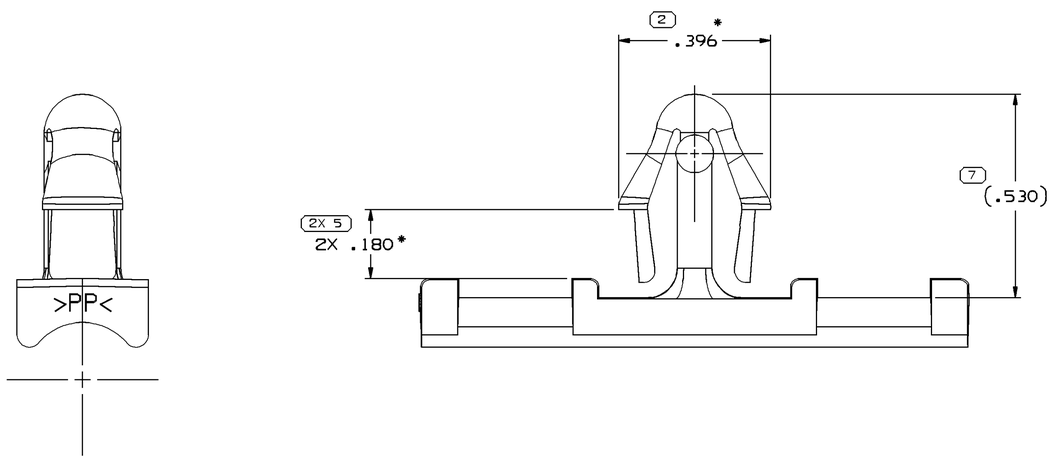

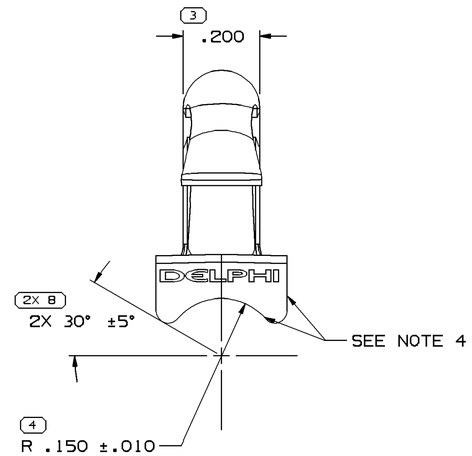

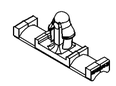

NOTES

1. UNLESS OTHERWISE SPECIFIED AND/OR INDICATED:

   DIMENSIONS ARE TO FACE OF VIEW SHOWN AND AUTOMATICALLY ROUNDED BY COMPUTER FOR INSPECTION (SEE MATH MODEL FOR PRECISE DIMENSIONS). FOR ALL OTHER DIMENSIONS NOT SHOWN BUT REQUIRED FOR TOOL BUILD, SEE MATH MODEL FOR PRECISE TOOL PATH DATA. ALL RADII .015

2. RECOMMEND HOLE SIZE .240-.260 DIA. HOLE IN .150 MAX THICK STOCK.

3. DIMENSIONS MARKED WITH * MAY VARY -.025

4. THIS PART IS CONTROLLED FOR AUTOMATIC FEEDING FLASH, GATES OR ANY TYPE OF PROTRUSIONS ARE NOT PERMISSIBLE ON AREAS SHOWN.

5. MATERIAL RECYCLING CODE PER ISO 11469. (.100)X(.010) RAISED CHARACTERS AS SHOWN TO BE LOCATED ON ANY EXTERIOR SURFACE. OPTIONAL CONSTRUCTION TO BE NO MATERIAL RECYCLING CODE.

6. (.100)X(.010) RAISED DELPHI CORPORATE BRAND TO BE LOCATED ON ANY EXTERIOR SURFACE, PREFERABLY VISIBLE AT FINAL ASSEMBLY. OPTIONAL CONSTRUCTION TO BE "PED" OR NO LOGO.

1 PROCESS SENSITIVE DIMENSION

DIMENSIONS ENCLOSED IN ( ) INDICATE REFERENCE DIMENSIONS AND NO TOLERANCE LIMITS ARE ESTABLISHED

DIMENSIONAL RANGE (IN)					CHART H
FROM	0	>.750	>1.250	>2.750	>4.000
TO	.750	1.250	2.750	4.000	
TOLERANCE UNLESS OTHERWISE SPECIFIED					
	±.005	±.010	±.012	±.016	±.020
ANGULAR TOLERANCE ±2°					

DWG TYPE: PART DRAWING

STYLE

VOLUME (CU³): 1.004

DISTR CODE

UNLESS OTHERWISE SPECIFIED

THIS DOCUMENT IS IN ACCORDANCE WITH ASME Y14.5M-1994 AS AMENDED BY THE GM GLOBAL DIMENSIONING AND TOLERANCING ADDENDUM - 1997. ALL GEOMETRIC TOLERANCES AND RELATED DATUMS APPLY AFS. RULE #1(PERFECT FORM AT MMC) DOES NOT APPLY WHEN RELATIONSHIP BETWEEN FEATURES IS ESTABLISHED BY ORIENTATION OR LOCATION TOLERANCES. SEPARATE POSITION CALLOUTS MAY BE GABED SEPARATELY, REGARDLESS OF DATUM REFERENCE.

ALL DIMENSIONS ARE IN INCHES

REFERENCE

THIRD ANGLE PROJECTION

DO NOT SCALE

USE MATH DATA

UNIGRAPHICS

DELPHI

DELPHI PACKARD ELECTRICAL/ELECTRONIC ARCHITECTURE
WARREN, OH

		DATE
DR		
APVD1	P. A. STAUDACHER	16JA7B
APVD2	T. MUDREY	19JA7B
APVD3	T. LUBERT	19JA7B
APVD4		
APVD5		

SUBSTANCES OF CONCERN AND RECYCLED CONTENT PER DELPHI 10949001

MATERIAL: POLYPROPYLENE COMPOUND GRA

DRAWING NAME: MOUN CLIP TAPE ON ROSEBUD

DRAWING NUMBER: 12010340

SIZE	SCALE	FRAME NO	SHEET NO	STG	REV	N/P
A1	5:1	1 OF 1	1 OF 1	R	04	AB

User: javi5
Part: 12010340-CUS01-S01
Message:
Date: 07-Jun-07 Time: 13:52

Mouser Electronics

Authorized Distributor

Click to View Pricing, Inventory, Delivery & Lifecycle Information:

Delphi Connection Systems:

12010340-B