Major League Electronics .100 cl Board Stacker Terminal Strips - Surface Mount

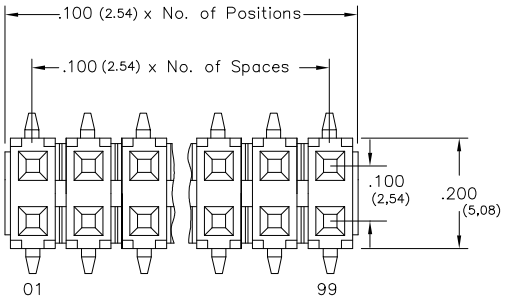

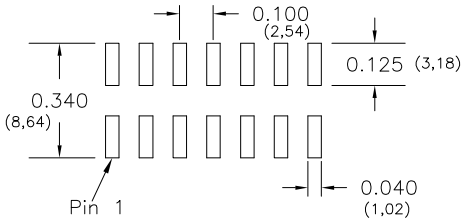

Recommended P.C. Board Layout

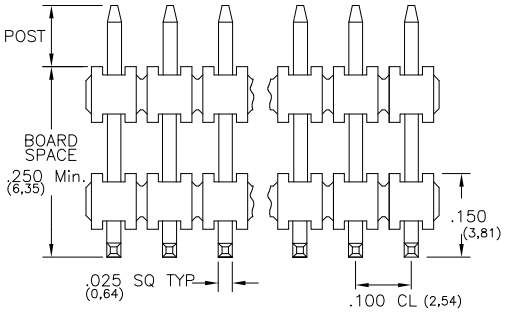

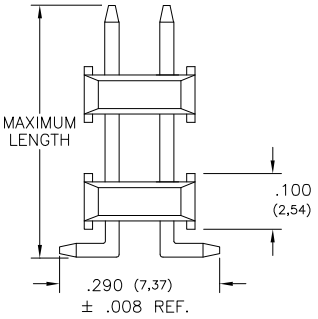

Length (L) – Board Space (B) = Post Height (P)

Tails may be clipped to achieve desired pin length

Ordering Information

BSTCM-1 [XX] – [D] – [XXX] – [XX] – [XX] – [XXX] – [XXX] – [XX] – [X] – [LF]

- Pins Per Row: 01 - 50
- Row Specification: D = Dual Row
- Desired Post Height: Please specify, e.g. .200 (5.08) = 200
- Desired Board Space: Please specify, e.g. .200 (5.08) = 200; .250 (6.35) Minimum
- Polarized Position: Leave blank if not needed; If required, specify empty pin position, e.g. 012 for Pin 12
- Packing Information:
  - TR-P = Tape and Reel with Plastic Pick and Place pad
  - TB-P = Tube with Plastic Pick and Place pad
  - TB-0 = Tube without Pick and Place Pad
  - *If left blank, packaging at MLE's discretion*
  - *Pad may be metal, mylar or plastic*
- Lead Free

Select nearest Pin Option greater than the sum of 'Desired Post Height' + 'Board Space'

Pin Options		
Max. Pin Length		
.380	9.65mm	06
.395	10.03mm	08
.406	10.31mm	10
.430	10.92mm	11
.480	12.19mm	14
.580	14.73mm	16
.680	17.27mm	20
.780	19.81mm	22
.880	22.35mm	24
.980	24.89mm	26
1.080	27.43mm	28
1.180	29.97mm	30
1.280	32.51mm	32
1.380	35.05mm	34
1.480	37.59mm	36

	Plating Options
H	30µ Gold on Contact Area / Matte Tin on Tail
T	Matte Tin all Over
GT	10µ Gold on Contact Area / Matte Tin on Tail
G	10µ Gold on Contact Area / Flash on Tail
F	Gold Flash over Entire Pin

Specifications

Current Rating: 3.0 Ampere
Insulation Resistance: 1000MΩ Min.
Dielectric Withstanding: 600V AC
Contact Resistance: 20 mΩ Max.
Operating Temperature: -40°C to + 105°C
Max. Process Temperature:
- Peak: 260°C up to 20 secs.
- Process: 230°C up to 60 secs.
- Wave: 260°C up to 6 secs.
- Reflow: 260°C up to 10 secs.
- Manual Solder: 350°C up to 5 secs.

Materials

Contact Material: Phosphor Bronze
Insulator Material: Nylon 6T
Plating: Au or Sn over 50µ" (1,27) Ni

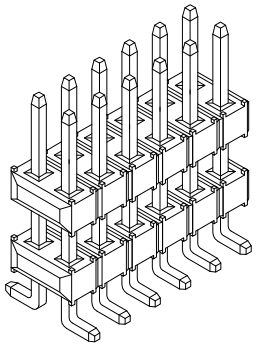

Mates with:
BCSS,
BSSH,
BSSHC,
BSSQ,
BSSQC,
BSSQM,
LBCSS,
LSMBC,
LSWSS,
SMBC,
SSHQ,
SSHQR,
SSHR,
SSHS,
SSHSM

Products cut to specific sizes are uncancellable/nonreturnable

Parts are subject to change without notice

BSTCM-1-D SERIES	.100 cl Dual Row - Vertical Board Stacker Terminal Strip - Surface Mount	25 JAN 07	Scale NTS

UNLESS OTHERWISE SPECIFIED DIMENSIONS IN INCHES (MM) TOLERANCES ARE:
ONE PLACE DECIMALS ±.100
TWO PLACE DECIMALS ±.010
THREE PLACE DECIMALS ±.005
FOUR PLACE DECIMALS ±.0020
ANGLES ±5°

4235 Earnings Way, New Albany, Indiana, 47150, USA
1-800-782-3486 (USA/Canada/Mexico)
Tel: 812-944-7244
Fax: 812-944-7268
E-mail: mle@mlelectronics.com
Web: www.mlelectronics.com

Edition 1

Sheet 1/1