Alle Rechte vorbehalten/ *All rights reserved*

Material:

Shielding: Copper alloy with nickel plating
Housing: PBT, UL-94-V0, black
Insert: PBT, UL-94-V0, black
Contact: -Phosphor bronze, selective gold plating over nickel in contact area
-Tin plating over nickel in solder area

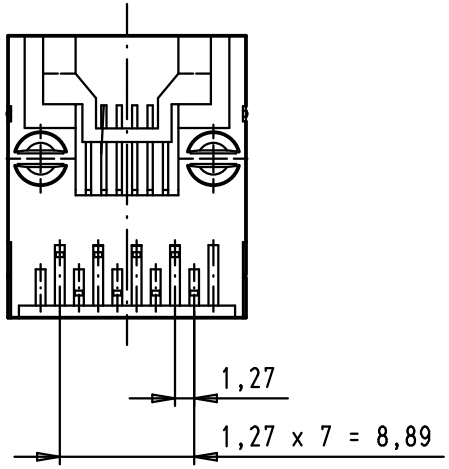

PCB layout, component side

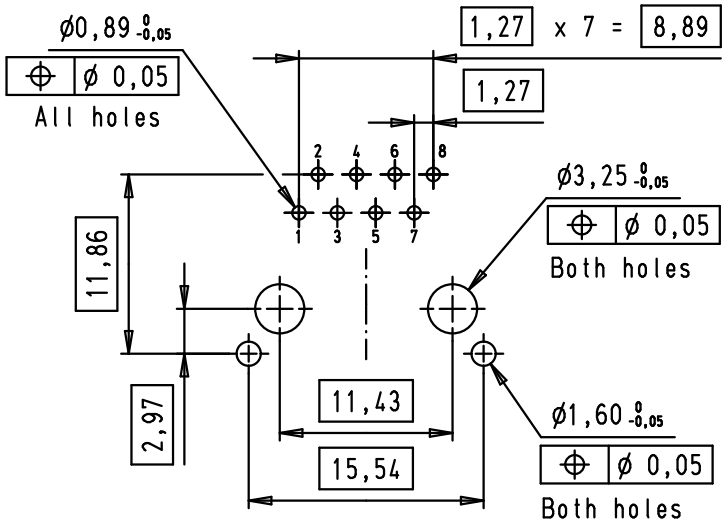

A-A

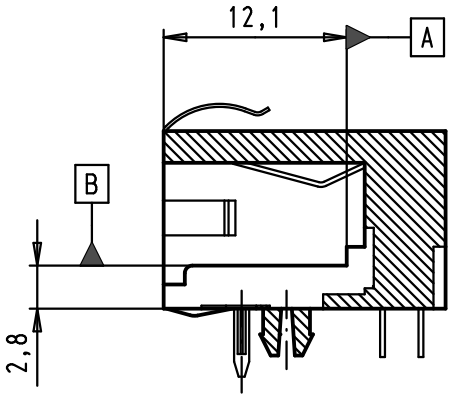

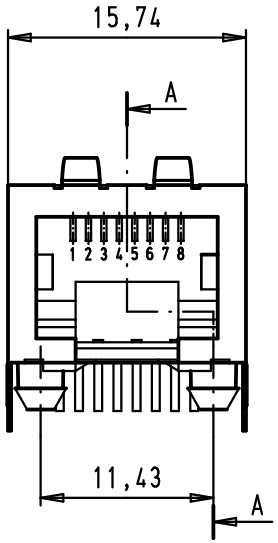

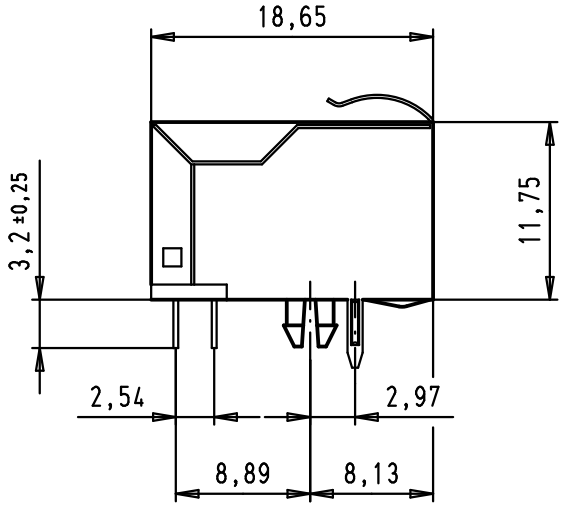

				Dat.	Name
36299	20/04/12	SD	Detail.	01/04/04	JH
35070	06/08/08	PK	Insp.	01/04/04	JMV
34885	21/02/08	LP	Stand.		
32489	16/12/04	JFB			
31884	01/04/04	JH			
Mod.	Dat.	Name			

All Dim. in mm
Orig. Size DIN A 4

HARTING EURL
F-95972 Paris

HARTING RJ Industrial®
RJ 45 Jack
with 8 signal solder pins
and 2 grounding solder pins

Maßstab/ *Scale* 2:1

TB 09 45 551 1101

Sub.

Blatt/ *Page* 1/1