CASE FINISH	CURRENT (AMPS)	WORKING VOLTAGE -55°C TO +85°C AC	WORKING VOLTAGE -55°C TO +85°C DC	WORKING VOLTAGE -55°C TO +125°C AC	WORKING VOLTAGE -55°C TO +125°C DC	MAXIMUM DC RESISTANCE (OHMS)	MAXIMUM VOLTAGE DROP DC	MAXIMUM VOLTAGE DROP AC	MINIMUM CAPACITANCE (uF)
SILVER	15	---	80	---	50	0.005	0.075	---	1.4

MIN. INSERTION LOSS PER MIL-STD-220 FULL LOAD, +25°C												
14 KHz	30 KHz	50 KHz	75 KHz	100 KHz	150 KHz	300 KHz	500 KHz	1 MHz	10 MHz	100 MHz	1 GHz	10 GHz
--	15	--	--	--	28	34	--	44	60	70	70	--

PART MARKING:

51-717-001
SCI DATE CODE

PACKAGE MARKING:

BUBBLE PACK:
SCI 51-717-001
DATE CODE
LOT NO.
QTY.

MARKING NOTES:

N/A

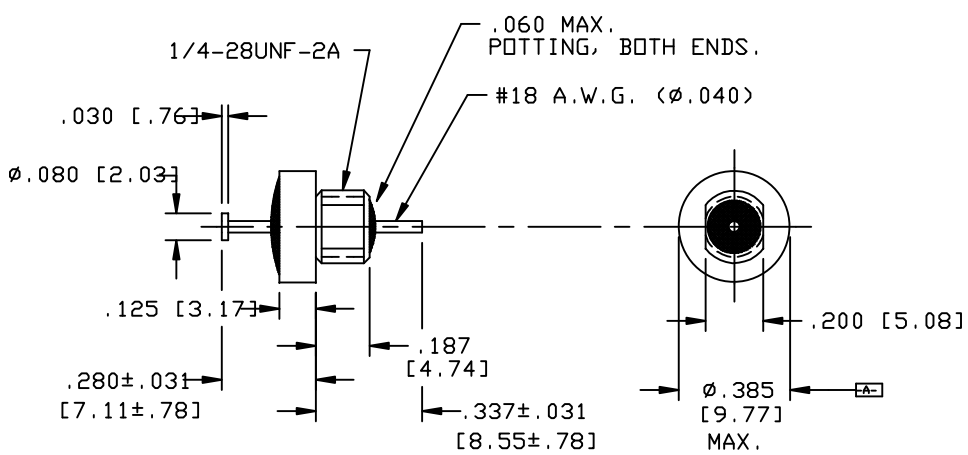

SCHEMATIC

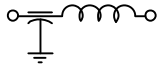

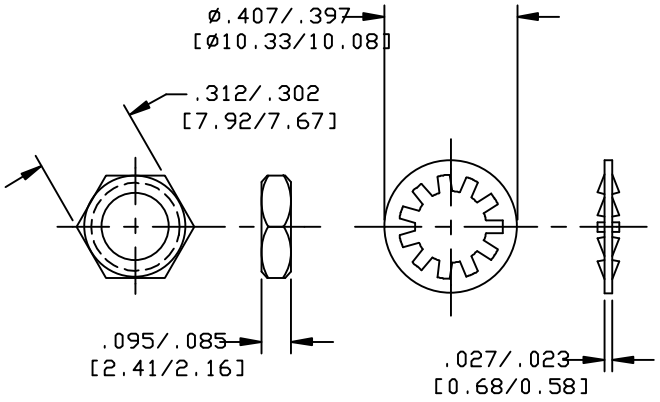

MTG. HARDWARE

NOTES:

1) MOUNTING TORQUE NOT TO EXCEED 7in-lbs.

REV. NO.	CHANGE NOTICE
44	CN. 177857
43	CN. 176660
42	CN. 175953

UNLESS OTHERWISE SPECIFIED DIMENSIONS ARE IN INCHES. [MILLIMETERS]

DO NOT SCALE.

TOLERANCES UNLESS OTHERWISE SPECIFIED
Fractions
Dec. .xx±
Dec. .xxx±010
Angles ±0° 30'

CODE IDENT. NO. OLSP2

SPECTRUM CONTROL INC.

Dwn KEVERLINE
Ckd 9-9-96

Sheet 1 of 1

ERIE, FAIRVIEW
PENNSYLVANIA

Description: Low Pass EMI Filter

51-717-001

Quality Products From The Specialists In Electro-Magnetic Compatibility