MICRO SWITCH
FREEPORT ILLINOIS U S A
A DIVISION OF HONEYWELL
FED MFG CODE 91929

SWITCH-TOGGLE

CATALOG LISTING
1TL887 SERIES
CHART 1

THIS DRAWING COVERS A PROPRIETARY ITEM AND IS THE PROPERTY OF MICRO SWITCH A DIVISION OF HONEYWELL THIS DRAWING IS NOT TO BE COPIED OR USED WITHOUT THE APPROVAL OF MICRO SWITCH

	CATALOG LISTING	△5 CIRCUIT MADE WITH TOGGLE LEVER IN: KEYWAY SIDE (1-2)	CENTER (1-2)	OPPOSITE KEYWAY (2-3)	CURRENT CAPACITY (AMPS) RESISTIVE LOAD DC VOLTS 28	125	250	AC VOLTS 125	250	LAMP LOAD 28 VDC	125 VAC	INDUCTIVE LOAD 28 VDC	125 VAC
	1TL887-1	ON	OFF	ON	20	.75	.5	15	6	5	3	15	10
	1TL887-2	OFF	NONE	ON									
	1TL887-3	ON	NONE	ON									
	1TL887-21	NONE	OFF	ON									
	1TL887-31	NONE	ON	ON									
	1TL887-4	MOM OFF	NONE	ON	15	.75	5	15	6	4	2	10	7
	1TL887-5	MOM ON	OFF	ON									
	1TL887-6	MOM ON	NONE	OFF									
△7	1TL887-7	MOM ON	OFF	MOM ON									
	1TL887-8	MOM ON	NONE	ON									
	1TL887-51	NONE	ON	MOM ON									
	1TL887-61	MOM ON	OFF	NONE									

(REFER TO L191 FOR UL RATING)

(REFER TO L192 FOR UL RATING)

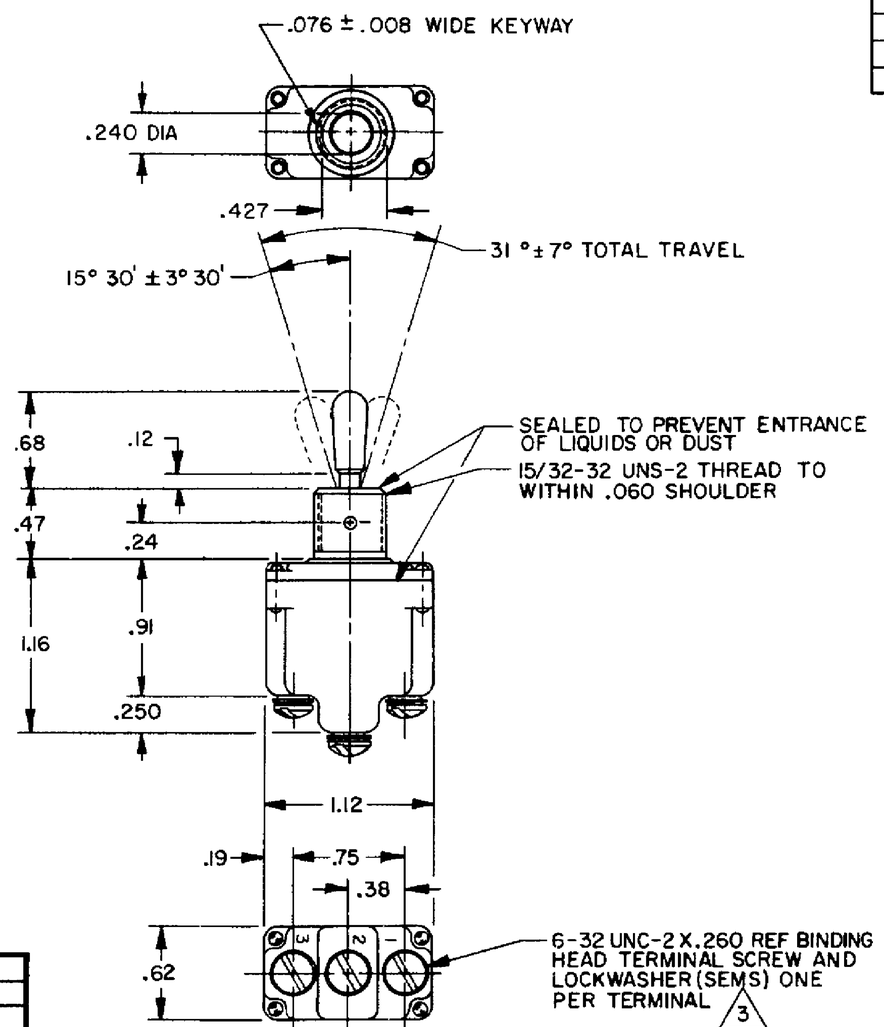

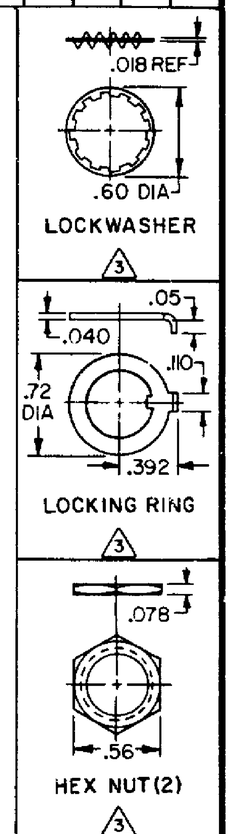

NOTES
1 - SWITCHES ARE CAPABLE OF WITHSTANDING A TEMPERATURE OF 160°F CONTINUOUSLY AT FULL RATED LOAD
2 - CIRCUIT DESIGNATION AND MICRO SWITCH CATALOG LISTING MARKED ON SIDE OF SWITCH
△3 FURNISHED UNASSEMBLED
4 - FOR TERMINAL COVER, SEE MICRO SWITCH CATALOG LISTING 5PA7
△5 APPLIES ONLY TO "ON" AND "MOMENTARY ON" POSITIONS
6 - CONFORMS TO REQUIRMENTS OF MIL-DTL-3950 EXCEPT: GOLD PLATED CONTACTS
△7 WARNING– THIS PRODUCT IS SUBJECT TO THE U.S. INTERNATIONAL TRAFFIC IN ARMS REGULATIONS (ITAR), AND THE EXPORT CONTROL LAWS OF THE UNITED STATES. TRANSFER OF TECHNICAL DATA PERTAINING TO THIS PRODUCT BY ANY MEANS TO A FOREIGN PERSON PER ITAR DEFINITIONS. WHETHER IN THE UNITED STATES OR ABROAD, WITHOUT A PRIOR EXPORT LICENSE OR OTHER APPROVAL FROM THE U.S. DEPARTMENT OF STATE, IS PROHIBITED.

SCALE FULL
DO NOT SCALE PRINT
UNLESS OTHERWISE NOTED
DIMENSIONS ARE IN INCHES
TOLERANCES ARE
ONE PLACE (.0) ±.030
TWO PLACE (.00) ±.015
THREE PLACE (.000) ±.005
ANGLES ±
WEIGHT 07 LBS APPROX

15A 125, 250, 277 VAC
1/2 HP 125 VAC,
1 HP 250,277 VAC
5A 125 VAC "L" L191

10A 125, 250, 277 VAC
1/4 HP 125 VAC,
1/2 HP 250,277 VAC
3A 125 VAC "L" L192

CATALOG LISTING 1TL887 SERIES CHART 1
PAGE 1 OF 1
ISSUE 5
RELEASE NO PR-14626
REPLACES
REVISIONS
A C077942 J A F 28 JUN 94
B CO-94431 C S L 24 NOV 99
C 0007584 CC-AP 31 AUG 04
D 0012918 DVM 11 MAY 05
CHECK AK 11 MAY05
CHECK
DRAWN JAF 28 JUN 94
RASTER