| MATERIAL NUMBER | OLD PART NUMBER | FINISHED LENGTH | CABLE JACKET MATERIAL |
|---|---|---|---|
| 1201140021 | BTY401P-FBE-05 | 16.40′ +6.50″ -0 [5.0M +165.1 -0] | PVC |
| 1201140022 | BTY401P-FBE-10 | 32.81′ +12.50″ -0 [10.0M +317.5 -0] | PVC |
| 1201140024 | BTY401P-FBP-05 | 16.40′ +6.50″ -0 [5.0M +165.1 -0] | PUR |
| 1201140023 | BTY401P-FBE-20 | 65.60′ +12.50″ -0 [20.0M +317.5 -0] | PVC |
| 1201140025 | BTY401P-FBP-10 | 32.81′ +12.50″ -0 [10.0M +317.5 -0] | PUR |
| 1201140026 | BTY401P-FBP-20 | 65.60′ +12.50″ -0 [20.0M +317.5 -0] | PUR |

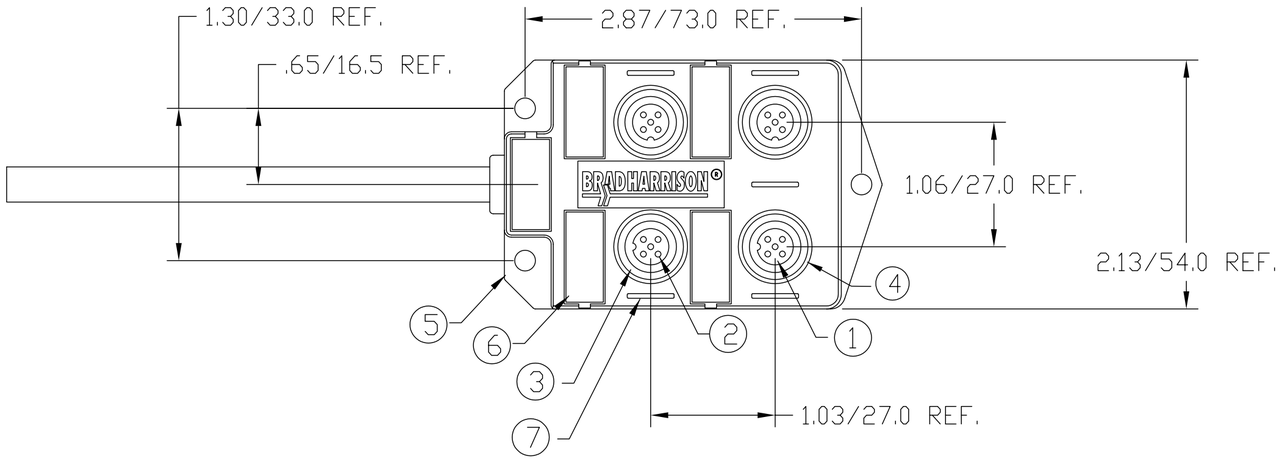


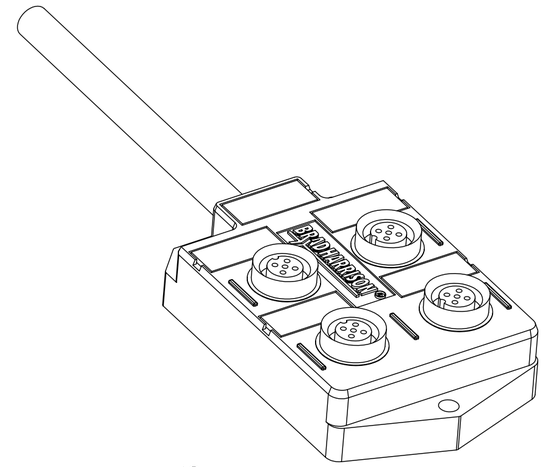


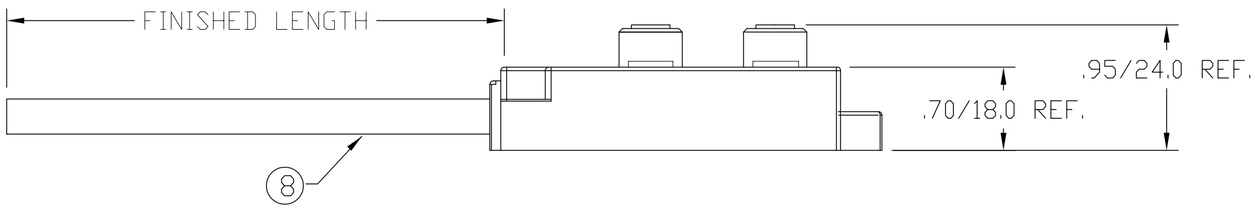


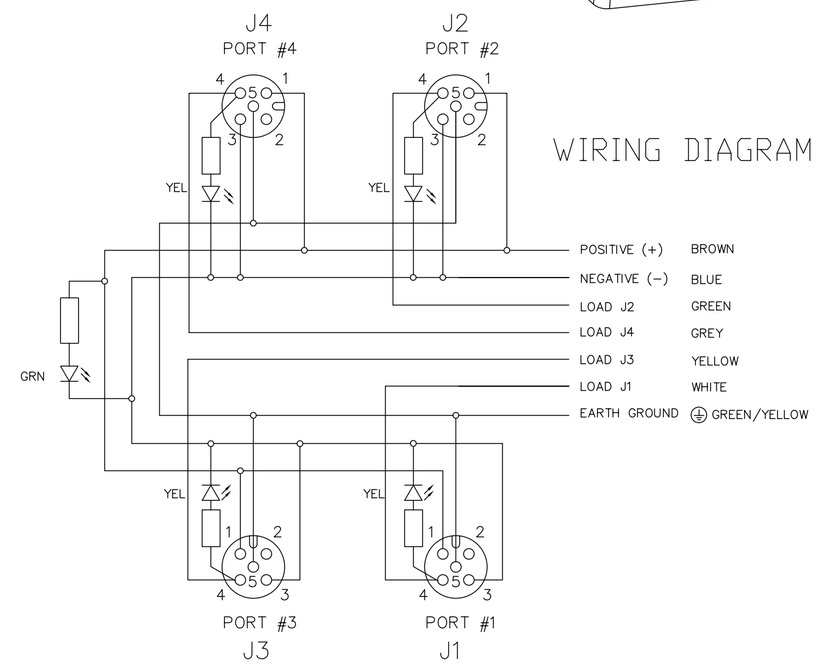


| | |
|---|---|
| VOLTAGE RATING | 10-30 VDC |
| AMPERAGE RATING PER PORT | 4 AMPS |
| PROTECTION | IP67 |
| OPERATING TEMPERATURE | -20°C TO 90°C |
| UL CERTIFICATIONS | UL RECOGNIZED, FILE NO. E46237 |
| CSA CERTIFICATIONS | CSA CERTIFIED, FILE NO. LR6837 |

| ITEM | COMPONENT | MATERIAL | FINISH |
|---|---|---|---|
| 1 | INSERT | NYLON | BLACK |
| 2 | CONTACT SOCKET | COPPER ALLOY | GOLD OVER NICKEL |
| 3 | O-RING | NITRILE | RED |
| 4 | RECEPTACLE SHELL | BRASS | NICKEL PLATED |
| 5 | HOUSING | PBT | YELLOW |
| 6 | LABEL | ABS | WHITE |
| 7 | LENS | NYLON | CLEAR |
| 8 | CABLE, 18AWG, 3 CONDUCTOR, 22AWG, 4 CONDUCTOR, 300V | SEE P/N TABLE | YELLOW |

| REV | DESCRIPTION |
|---|---|
| B1 | ADD 2 P/N'S TO TABLE<br>EC NO: WEU2010-0374 2/16/10<br>DRWN: FPACHER 2009/08/27<br>CH'KD: NSTAUDIG 2009/08/27<br>APPR: NSTAUDIG 2010/02/18 |

QUALITY SYMBOL
▼=0
(C)=0

GENERAL TOLERANCES (UNLESS SPECIFIED)

| | mm | INCH |
|---|---|---|
| 4 PLACES | ±- | ±- |
| 3 PLACES | ±- | ±- |
| 2 PLACES | ±- | ±.01 |
| 1 PLACE | ±0.3 | ±- |
| ANGULAR ±-° | | |

DRAFT WHERE APPLICABLE MUST REMAIN WITHIN DIMENSIONS

DIMENSION STYLE: IN/MM
SCALE: NTS
DESIGN UNITS: METRIC
THIRD ANGLE PROJECTION

DRAWN BY: BW DATE: 2009/04/02
CHECKED BY: TW DATE: 2009/04/02
APPROVED BY: NSTAUDIG DATE: 2010/02/18

TITLE: MICRO-CHANGE MPIS 4 PORT TOP MOUNT PNP #18/3 + #22/4 CABLE

molex MOLEX INCORPORATED

MATERIAL NO.: SEE CHART
DOCUMENT NO.: SD-120114-002
SHEET NO.: 1 OF 1
SIZE: C

THIS DRAWING CONTAINS INFORMATION THAT IS PROPRIETARY TO MOLEX INCORPORATED AND SHOULD NOT BE USED WITHOUT WRITTEN PERMISSION