NOTES:
1) MAX. MOUNTING TORQUE IS 6lb-in.
2) HARDWARE IS INCLUDED.
3) THIS IS A LEAD FREE PRODUCT.
4) MAX REFLOW IS 245°C FOR 5 SEC.

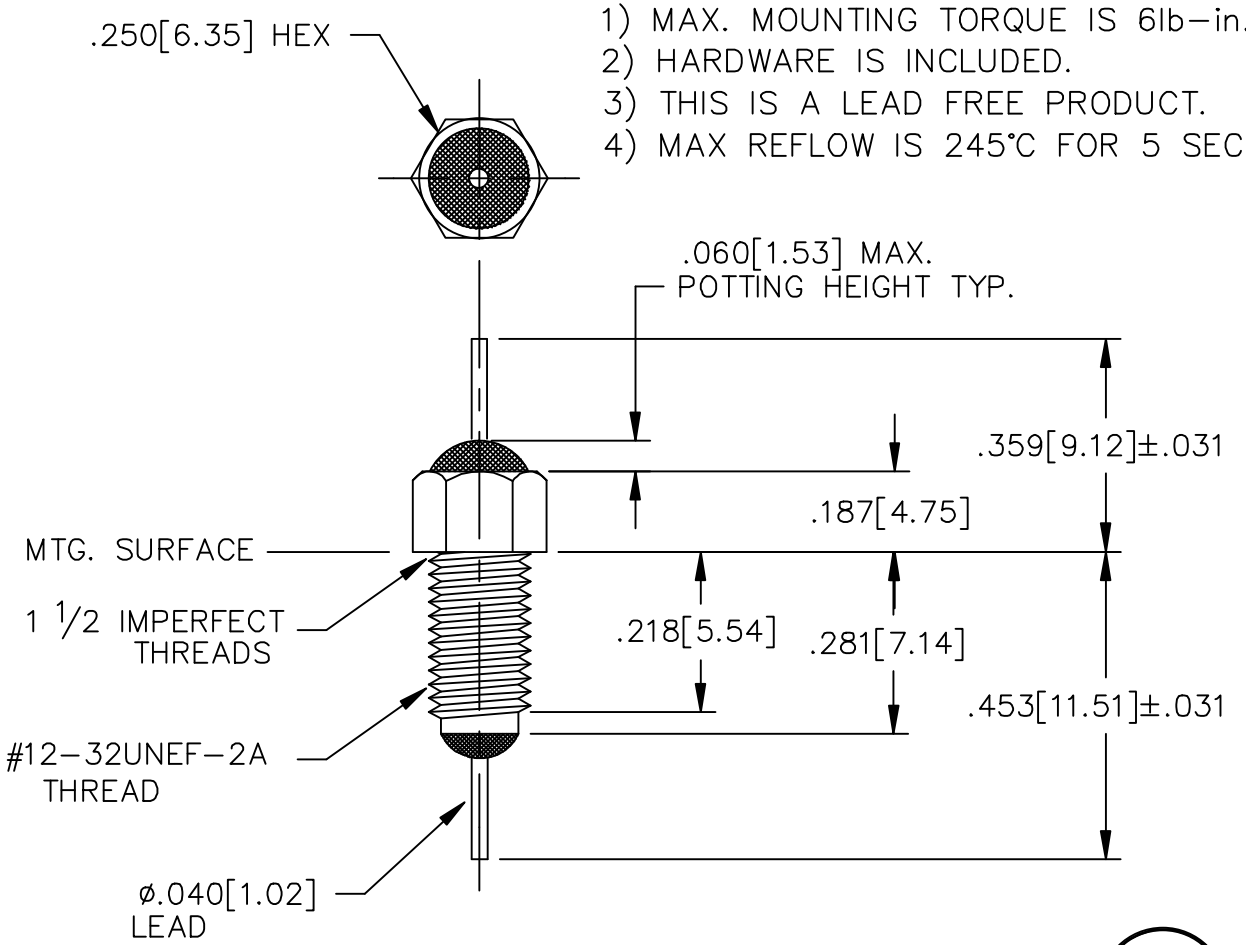

RoHS COMPLIANT

LEAD FINISH:	SILVER
BUSHING FINISH:	SILVER
CAPACITANCE	3000pF MIN.
TEMP. RANGE	-55°C TO 125°C
CURRENT	10 AMP MAX.
WORKING VOLTAGE -55°C TO 125°C	115VAC @ 400Hz 500VDC MAX.
D.C. RESISTANCE	.01ohms MAX.

MIN. I.L. PER MIL-STD-220 AT 25°C NO LOAD

FREQ. MHz	I.L. (db)
10	12
30	20
100	45
300	60
500	--
1GHz	60
10GHz	60

SCHEMATIC

MARKING:
PART: SF011 (FAIRVIEW)
SF011M (MEXICO)

BAG:
51F-719-011
DATE CODE
QTY./BAG (100 MAX.)

REV. NO.	CHANGE NOTICE
01	CN 27111-CPD
00	CN 19425-CPD

TOLERANCES UNLESS OTHERWISE SPECIFIED
Fractions ± 1/64
Dec. .xx±
Dec. .xxx±.010
Angles ±0° 30'
CODE IDENT. NO. OLSP2

SPECTRUM CONTROL INC.
FAIRVIEW PENNSYLVANIA

Dwn. KNOWLTON
Date 05/22/06
Engr. STRUCHEN
Scale NONE
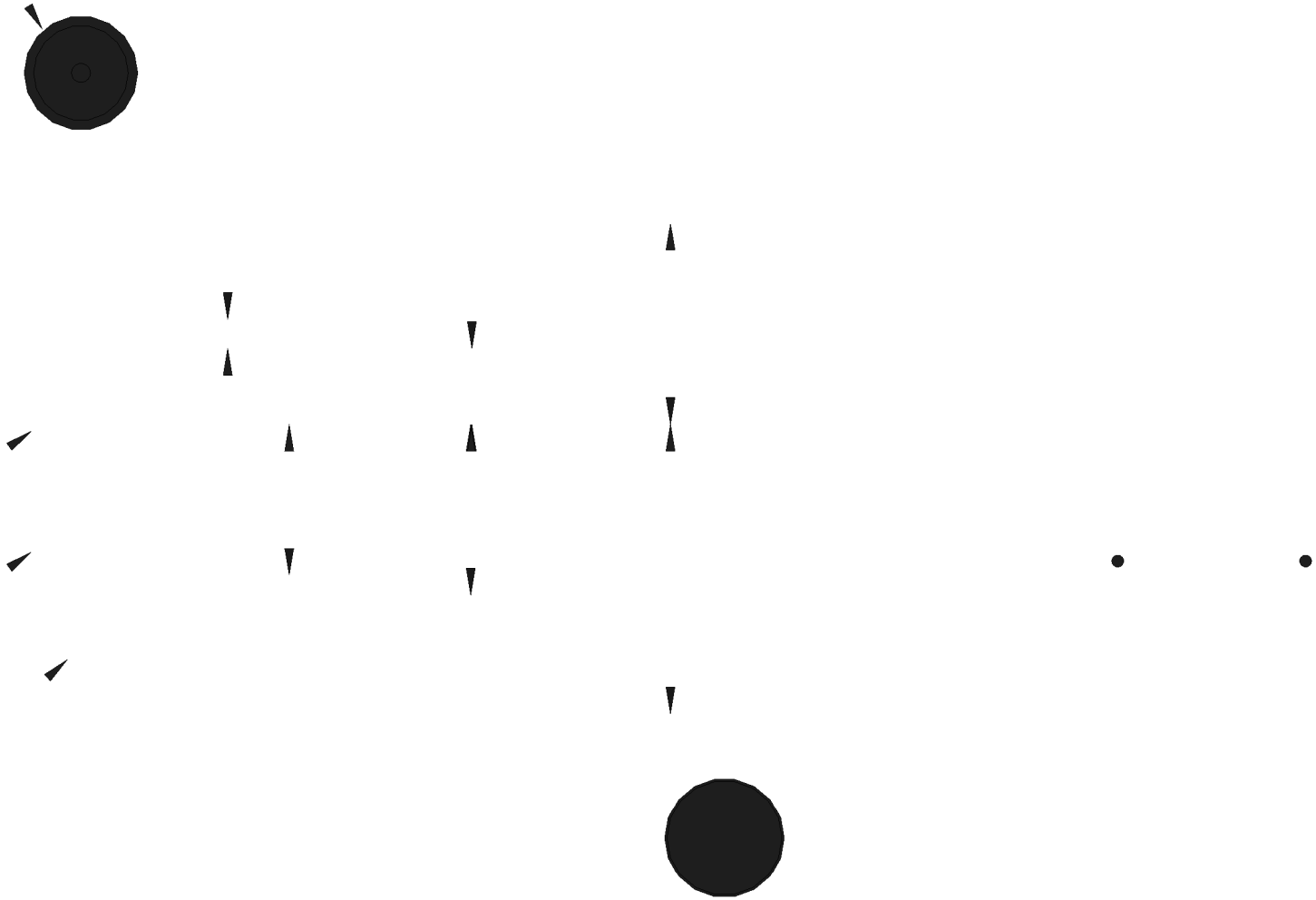
Description Pi
RESIN SEAL FILTER
51F-719-011