DATE	DESCRIPTION	REV.

INSULATOR BASE

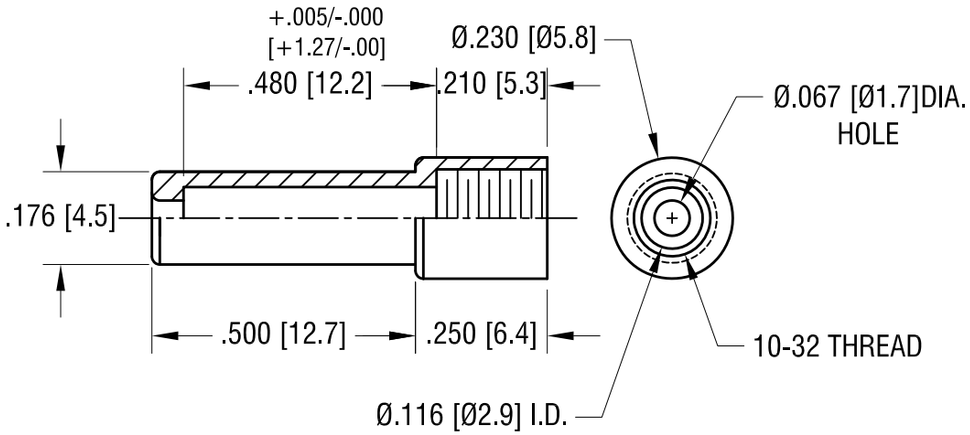

BODY

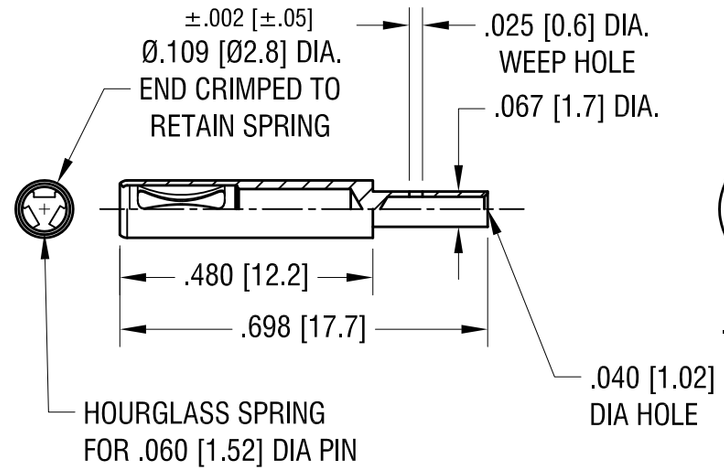

INSULATOR CAP

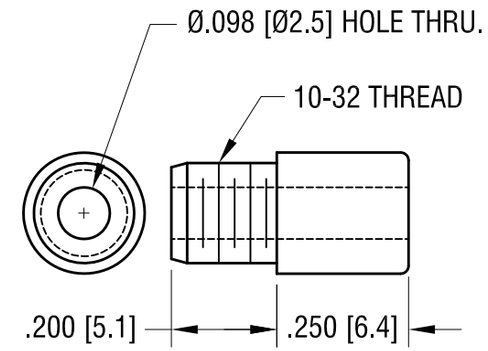

PART NUMBER	COLOR
9012	WHITE
9013	RED
9014	BLACK
9015	GREEN
9016	YELLOW
9017	BLUE

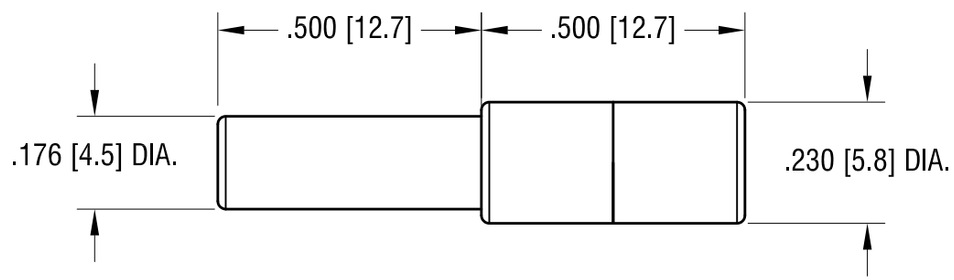

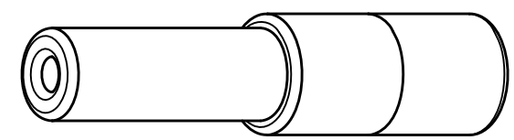

NOTES:
1. INSULATOR - POLYCARBONATE
   BODY - BRASS, GOLD PLATE
   CONTACT - BERYLILIUM COPPER, GOLD PLATE
2. SUPPLIED UNASSEMBLED

THIS DOCUMENT IS THE PROPERTY OF KEYSTONE ELECTRONICS CORP. AND SHALL NOT BE REPRODUCED, DISTRIBUTED OR USED AS A BASIS FOR MANUFACTURE WITHOUT PRIOR WRITTEN PERMISSION FROM KEYSTONE ELECTRONICS CORP.

KEYSTONE ELECTRONICS CORP.
www.keyelco.com • ASTORIA, N.Y. 11105-2017 • Tel (718) 956-8900

PART NAME	SHROUDED SPRING CONTACT		
MATERIAL	AS NOTED		
FINISH	AS NOTED	DRN BY HAMILTON	DATE 28MAY09
		APP'D	SCALE 3X
TOLERANCES INCH [MM] DECIMAL ± .005 [± 0.15] ANGULAR ± 1° UNLESS OTHERWISE SPECIFIED	CODE C/M	DWG NO. 9012-9017	