REV.	DATE	DESCRIPTION
A	05/23/05	UPDATE DRAWING FORMAT

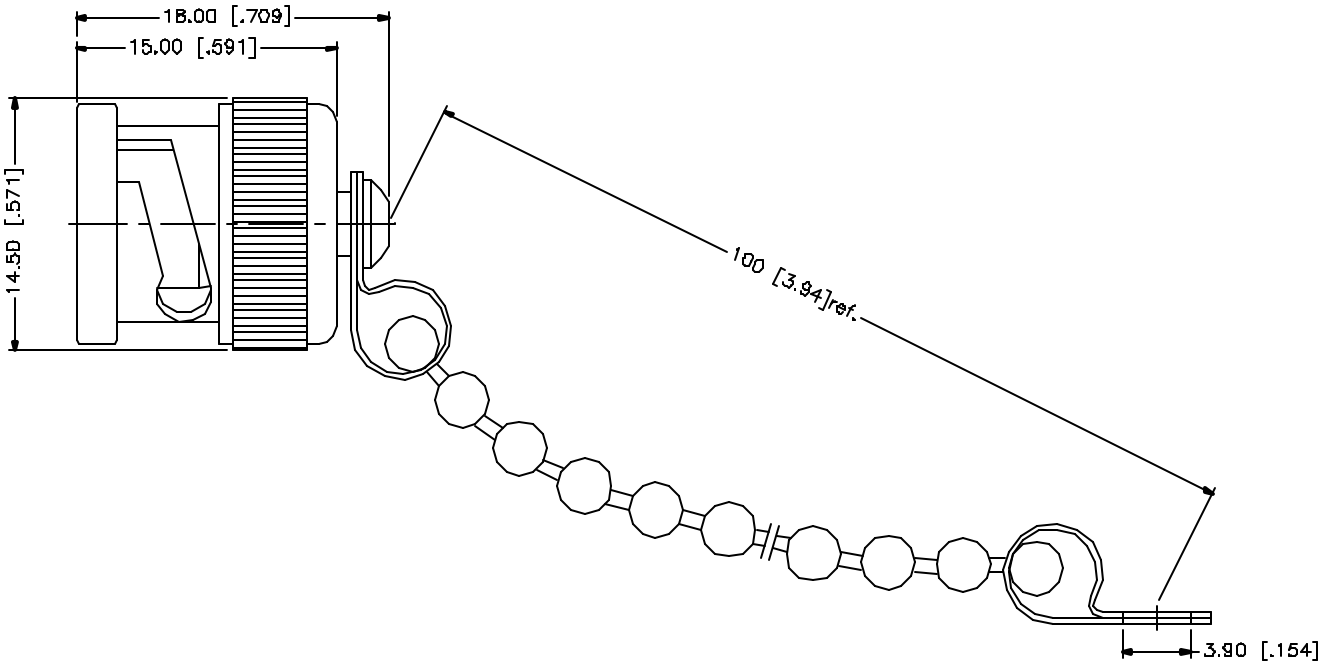

8				
7				
6				
5				
4				
3				
2	CHAIN	BRASS	NICKEL	1
1	BODY	BRASS	NICKEL	1
	DESCRIPTION	MATERIAL	FINISH	QTY

UNLESS OTHERWISE SPECIFIED DIMENSIONS ARE IN MILLIMETERS. DIMENSIONS IN [ ] ARE IN INCHES AND FOR CUSTOMER REFERANCE ONLY.

UNLESS OTHERWISE SPECIFIED TOLERANCES FOR MILLIMETERS ARE:
0.5 – 6mm ± 0.20mm
6 – 30mm ± 0.40mm
30 – 120mm ± 0.50mm

UNLESS OTHERWISE SPECIFIED TOLERANCES FOR INCHES ARE:
.020 – .315 = ± 0.007"
.315 – 1.180 = ± 0.015"
1.180 – 4.724 = ± 0.020"

DO NOT SCALE DRAWING

APPROVALS		DATE
DRAWN	G.R.S.	05/23/05
CHECKED		
ISSUED		
SHEET	1 OF 1	

CAD FILE C:/202/202100.DWG

Amphenol Connex

PART DESCRIPTION: BNC MALE CAP WITH CHAIN

PART NO. 202100

DWG. NO.	REV.	SIZE	SCALE
202100.DWG	A	A	NA