THESE DRAWINGS AND SPECIFICATIONS ARE THE SOLE PROPERTY OF I/O INTERCONNECT INC., U.S.A. AND SHALL NOT BE REPRODUCED, COPIED, OR USED IN ANY MANNER WITHOUT THE PRIOR WRITTEN CONSENT OF I/O INTERCONNECT INC. OR ITS AFFILIATED SUBSIDIARIES.

DWG. NO.	ZONE	REV.	DESCRIPTION	DATE	APPROVED
XX4-52X-D		X1	CUSTOMER APPROVAL	03/26/99	E.W.
		X2	ADD RETRACTED LENGTH	03/29/99	E.W.

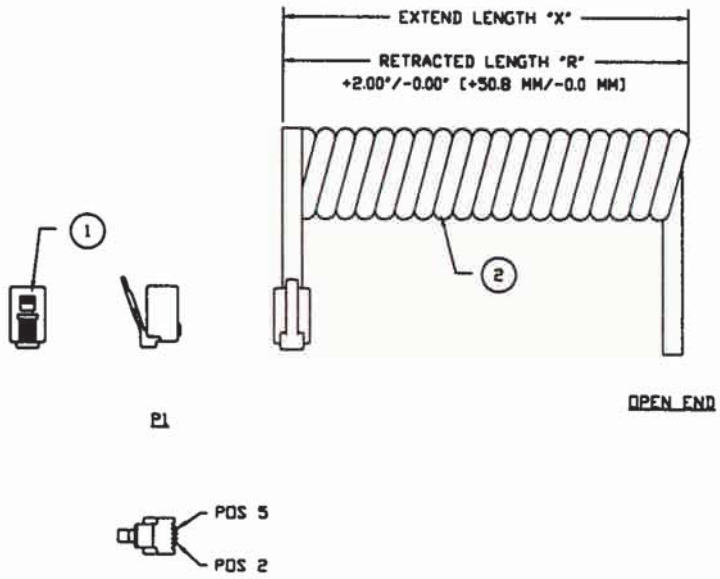

WIRE DIAGRAM

P1	OPEN END
2	BLACK
3	RED
4	GREEN
5	YELLOW

101 PART NUMBER	101 CABLE PART NUMBER	EXTENDED LENGTH "X"	RETRACTED LENGTH "R"	COLOR
464-144-525-D	121-410-022	14.0 FT [4.3 M]	34.0 IN [863.6 MM]	WHITE
464-144-524-D	121-410-012	14.0 FT [4.3 M]	34.0 IN [863.6 MM]	BLACK
464-144-523-D	121-410-002	14.0 FT [4.3 M]	34.0 IN [863.6 MM]	SILVER SATIN
464-104-522-D	121-410-021	10.0 FT [3.0 M]	30.0 IN [762.0 MM]	WHITE
464-104-521-D	121-410-011	10.0 FT [3.0 M]	30.0 IN [762.0 MM]	BLACK
464-104-520-D	121-410-001	10.0 FT [3.0 M]	30.0 IN [762.0 MM]	SILVER SATIN
464-074-525-D	121-410-020	7.0 FT [2.1 M]	21.0 IN [533.4 MM]	WHITE
464-074-524-D	121-410-010	7.0 FT [2.1 M]	21.0 IN [533.4 MM]	BLACK
464-074-523-D	121-410-000	7.0 FT [2.1 M]	21.0 IN [533.4 MM]	SILVER SATIN
464-054-522-D	121-410-023	5.0 FT [1.5 M]	17.0 IN [431.8 MM]	WHITE
464-054-521-D	121-410-013	5.0 FT [1.5 M]	17.0 IN [431.8 MM]	BLACK
464-054-520-D	121-410-003	5.0 FT [1.5 M]	17.0 IN [431.8 MM]	SILVER SATIN

TABULATION BLOCK

CUSTOMER APPROVAL
ENGR. SIGN Matt Nemec
DATE: 4-13-99

NOTES: UNLESS OTHERWISE SPECIFIED.

1. TEST CABLE FOR ALL OPENS & SHORTS.
2. PACKAGE CABLE ASSEMBLY INDIVIDUALLY IN PLASTIC BAG. PACKAGE INDIVIDUAL BAG PER LOT NUMBER QUANTITIES.

ITEM	QTY	MFG.	101 PART NO.	DESCRIPTION
2	"X" FT	101	SEE "TABULATION BLOCK"	MODULAR COIL CABLE, 26 AWG (7/34) BARE COPPER, 4 CONDUCTOR, UNSHIELDED, PVC JACKET, (SEE TABULATION BLOCK FOR COLOR).
1	1 PC	101	325-641-50X	CONNECTOR, MODULAR PLUG, 6 POSITION, 4 CONDUCTOR, 50u" Au, FLAT TYPE EXIT.

CABLE ASSEMBLY PARTS LIST

THIRD ANGLE PROJECTION

UNLESS OTHERWISE NOTED:
1) DIMENSIONS ARE IN INCHES [MILLIMETER]
2) TOLERANCES:
X.XX ± 0.25 [6.35]

I/O INTERCONNECT
SANTA ANA, CALIFORNIA

TITLE: 6P4C COIL CABLE TO OPEN END, CABLE ASSEMBLY

PART NO: 464-XX4-52X-D
DWG NO: 464-XX4-52X-D
CUSTOMER: DIGI KEY
REV. X2
SCALE: NONE
SHEET 1 OF 1

THESE DRAWINGS AND SPECIFICATIONS ARE THE SOLE PROPERTY OF I/O INTERCONNECT INC., U.S.A. AND SHALL NOT BE REPRODUCED, COPIED, OR USED IN ANY MANNER WITHOUT THE PRIOR WRITTEN CONSENT OF I/O INTERCONNECT INC. OR ITS AFFILIATED SUBSIDIARIES.

DWG. NO.	ZONE	REV.	DESCRIPTION	DATE	APPROVED
XX4-51X-D		X1	CUSTOMER APPROVAL	03/26/99	E.W.
		X2	ADD RETRACTED LENGTH	03/29/99	E.W.

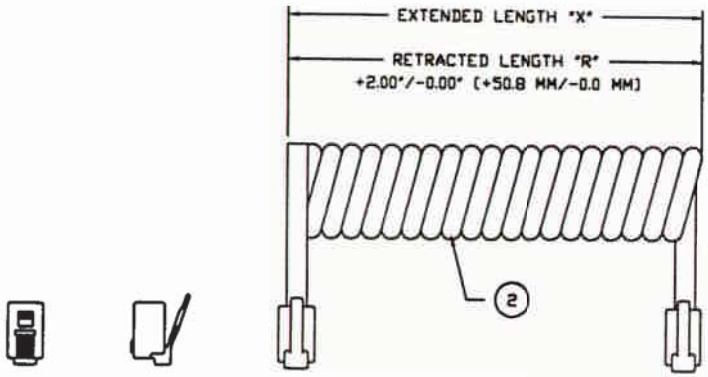

P1

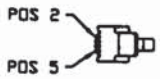

WIRE DIAGRAM

P1		P2
2	BLACK	5
3	RED	4
4	GREEN	3
5	YELLOW	2

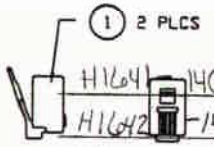

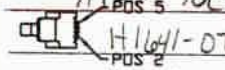

	101 PART NUMBER	101 CABLE PART NUMBER	EXTENDED LENGTH "X"	RETRACTED LENGTH "R"	COLOR
H1641-14C-ND	464-144-515-D	121-410-022	14.0 FT [4.3 M]	34.0 IN [863.6 MM]	WHITE
H1642-14C-ND	464-144-514-D	121-410-012	14.0 FT [4.3 M]	34.0 IN [863.6 MM]	BLACK
H1643-14C-ND	464-144-513-D	121-410-002	14.0 FT [4.3 M]	34.0 IN [863.6 MM]	SILVER SATIN
P2 H1641-10C-ND	464-104-512-D	121-410-021	10.0 FT [3.0 M]	30.0 IN [762.0 MM]	WHITE
H1642-10C-ND	464-104-511-D	121-410-011	10.0 FT [3.0 M]	30.0 IN [762.0 MM]	BLACK
H1643-10C-ND	464-104-510-D	121-410-001	10.0 FT [3.0 M]	30.0 IN [762.0 MM]	SILVER SATIN
H1641-07C-ND	464-074-515-D	121-410-020	7.0 FT [2.1 M]	21.0 IN [533.4 MM]	WHITE
H1642-07C-ND	464-074-514-D	121-410-010	7.0 FT [2.1 M]	21.0 IN [533.4 MM]	BLACK
H1643-07C-ND	464-074-513-D	121-410-000	7.0 FT [2.1 M]	21.0 IN [533.4 MM]	SILVER SATIN
H1641-05C-ND	464-054-512-D	121-410-023	5.0 FT [1.5 M]	17.0 IN [431.8 MM]	WHITE
H1642-05C-ND	464-054-511-D	121-410-013	5.0 FT [1.5 M]	17.0 IN [431.8 MM]	BLACK
H1643-05C-ND	464-054-510-D	121-410-003	5.0 FT [1.5 M]	17.0 IN [431.8 MM]	SILVER SATIN

TABULATION BLOCK

CUSTOMER APPROVAL
ENGR. SIGN Matt Nemec
DATE: 4-13-99

NOTES: UNLESS OTHERWISE SPECIFIED.

1. TEST CABLE FOR ALL OPENS & SHORTS.
2. PACKAGE CABLE ASSEMBLY INDIVIDUALLY IN PLASTIC BAG. PACKAGE INDIVIDUAL BAG PER LOT NUMBER QUANTITIES.

ITEM	QTY	MFG.	101 PART NO.	DESCRIPTION
2	"X" FT	101	SEE "TABULATION BLOCK"	MODULAR COIL CABLE, 26 AWG (7/34) BARE COPPER, 4 CONDUCTOR, UNSHIELDED, PVC JACKET, (SEE TABULATION BLOCK FOR COLOR).
1	2 PCS	101	325-641-50X	CONNECTOR, MODULAR PLUG, 6 POSITION, 4 CONDUCTOR, 50u" Au, FLAT TYPE EXIT.

CABLE ASSEMBLY PARTS LIST

THIRD ANGLE PROJECTION

UNLESS OTHERWISE NOTED:
1) DIMENSIONS ARE IN INCHES [MILLIMETER]
2) TOLERANCES:
X.XX ± 0.25 [6.35]

I/O INTERCONNECT
SANTA ANA, CALIFORNIA

TITLE: 6P4C/6P4C COIL CABLE, STANDARD STYLE, CABLE ASSEMBLY

PART NO: 464-XX4-51X-D
DWG NO: 464-XX4-51X-D
CUSTOMER: DIGI KEY
REV. X2
SCALE: NONE
SHEET 1 OF 1

THESE DRAWINGS AND SPECIFICATIONS ARE THE SOLE PROPERTY OF I/O INTERCONNECT INC., U.S.A. AND SHALL NOT BE REPRODUCED, COPIED, OR USED IN ANY MANNER WITHOUT THE PRIOR WRITTEN CONSENT OF I/O INTERCONNECT INC. OR ITS AFFILIATED SUBSIDIARIES.

DWG. NO.	ZONE	REV.	DESCRIPTION	DATE	APPROVED
XX4-50X-D		X1	CUSTOMER APPROVAL	03/25/99	E.W.
		X2	ADD RETRACTED LENGTH	03/29/99	E.W.

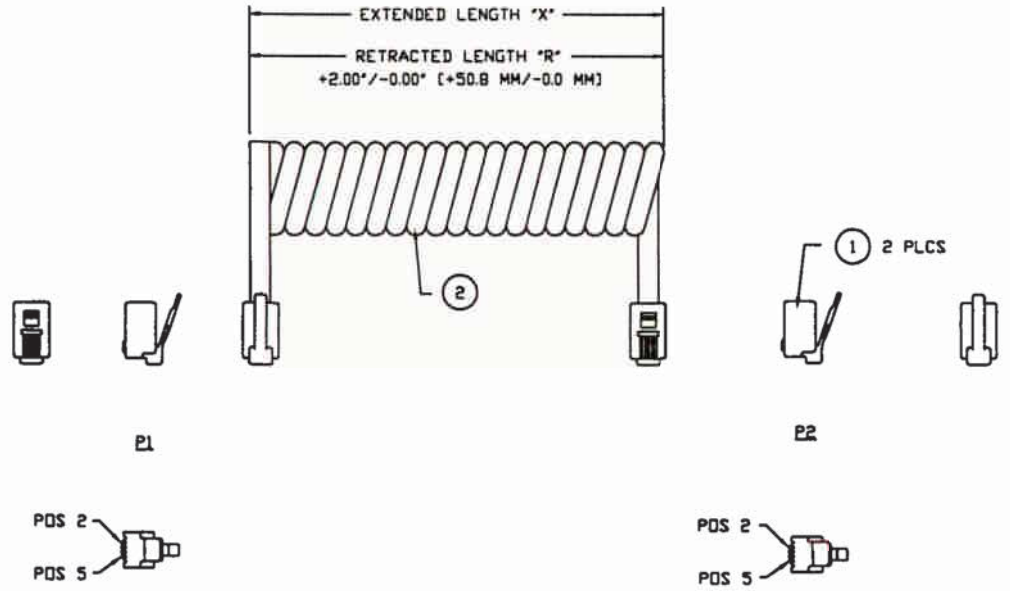

WIRE DIAGRAM

P1		P2
2	BLACK	2
3	RED	3
4	GREEN	4
5	YELLOW	5

101 PART NUMBER	101 CABLE PART NUMBER	EXTENDED LENGTH "X"	RETRACTED LENGTH "R"	COLOR
464-144-505-D	121-410-022	14.0 FT [4.3 M]	34.0 IN [863.6 MM]	WHITE
464-144-504-D	121-410-012	14.0 FT [4.3 M]	34.0 IN [863.6 MM]	BLACK
464-144-503-D	121-410-002	14.0 FT [4.3 M]	34.0 IN [863.6 MM]	SILVER SATIN
464-104-502-D	121-410-021	10.0 FT [3.0 M]	30.0 IN [762.0 MM]	WHITE
464-104-501-D	121-410-011	10.0 FT [3.0 M]	30.0 IN [762.0 MM]	BLACK
464-104-500-D	121-410-001	10.0 FT [3.0 M]	30.0 IN [762.0 MM]	SILVER SATIN
464-074-505-D	121-410-020	7.0 FT [2.1 M]	21.0 IN [533.4 MM]	WHITE
464-074-504-D	121-410-010	7.0 FT [2.1 M]	21.0 IN [533.4 MM]	BLACK
464-074-503-D	121-410-000	7.0 FT [2.1 M]	21.0 IN [533.4 MM]	SILVER SATIN
464-054-502-D	121-410-023	5.0 FT [1.5 M]	17.0 IN [431.8 MM]	WHITE
464-054-501-D	121-410-013	5.0 FT [1.5 M]	17.0 IN [431.8 MM]	BLACK
464-054-500-D	121-410-003	5.0 FT [1.5 M]	17.0 IN [431.8 MM]	SILVER SATIN

TABULATION BLOCK

CUSTOMER APPROVAL
ENGR. SIGN Matt Nemec
DATE: 4-13-99

NOTES: UNLESS OTHERWISE SPECIFIED.

1. TEST CABLE FOR ALL OPENS & SHORTS.
2. PACKAGE CABLE ASSEMBLY INDIVIDUALLY IN PLASTIC BAG. PACKAGE INDIVIDUAL BAG PER LOT NUMBER QUANTITIES.

ITEM	QTY	MFG.	101 PART NO.	DESCRIPTION
2	"X" FT	101	SEE "TABULATION BLOCK"	MODULAR COIL CABLE, 26 AWG (7/34) BARE COPPER, 4 CONDUCTOR, UNSHIELDED, PVC JACKET, (SEE TABULATION BLOCK FOR COLOR).
1	2 PCS	101	325-641-50X	CONNECTOR, MODULAR PLUG, 6 POSITION, 4 CONDUCTOR, 50u" Au, FLAT TYPE EXIT.

CABLE ASSEMBLY PARTS LIST

THIRD ANGLE PROJECTION

UNLESS OTHERWISE NOTED:
1) DIMENSIONS ARE IN INCHES [MILLIMETER]
2) TOLERANCES:
X.XX ± 0.25 [6.35]

I/O INTERCONNECT
SANTA ANA, CALIFORNIA

TITLE: 6P4C/6P4C COIL CABLE, REVERSE STYLE, CABLE ASSEMBLY

PART NO: 464-XX4-50X-D
DWG NO: 464-XX4-50X-D
CUSTOMER: DIGI KEY
REV. X2
SCALE: NONE
SHEET 1 OF 1

THESE DRAWINGS AND SPECIFICATIONS ARE THE SOLE PROPERTY OF I/O INTERCONNECT INC., U.S.A. AND SHALL NOT BE REPRODUCED, COPIED, OR USED IN ANY MANNER WITHOUT THE PRIOR WRITTEN CONSENT OF I/O INTERCONNECT INC. OR ITS AFFILIATED SUBSIDIARIES.

DWG. NO.	ZONE	REV.	DESCRIPTION	DATE	APPROVED
XX4-522-D		X1	CUSTOMER APPROVAL	03/24/99	E.W.

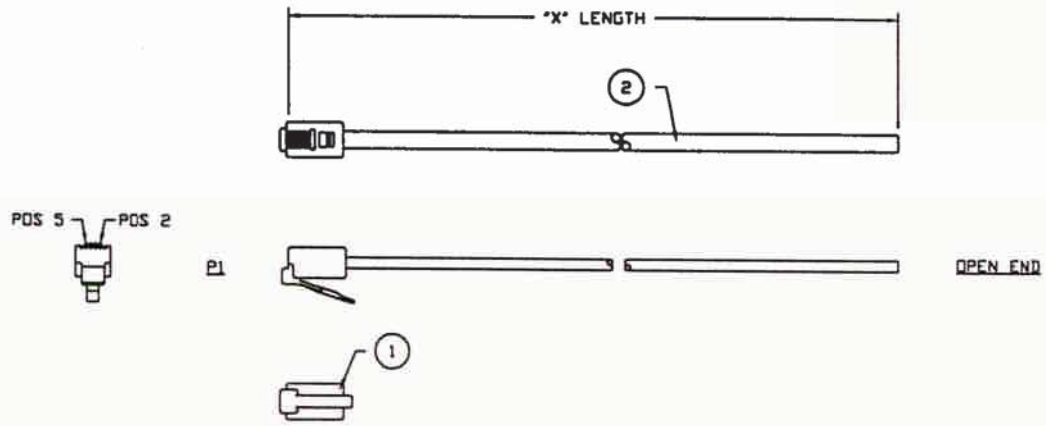

WIRE DIAGRAM

P1	OPEN END
2	BLACK
3	RED
4	GREEN
5	YELLOW

CUSTOMER APPROVAL
ENGR. SIGN Matt Nemec
DATE: 4-12-99

H3641-25-ND
H3641-14-ND
H3641-07-ND

PART NUMBER I/O INTERCONNECT	LENGTH "X"
464-254-522-D	25.0 FT ± 4.0 IN 7.62 M ± 101.6 MM
464-144-522-D	14.0 FT ± 3.0 IN 4.27 M ± 76.2 MM
464-074-522-D	7.0 FT ± 2.0 IN 2.13 M ± 50.8 MM

NOTES: UNLESS OTHERWISE SPECIFIED.

1. CABLE TO BE BUNDLED AND TWIST TIED.
2. TEST CABLE FOR ALL OPENS & SHORTS.
3. PACKAGE CABLE ASSEMBLY INDIVIDUALLY IN PLASTIC BAG. PACKAGE INDIVIDUAL BAG PER LOT NUMBER QUANTITIES.

ITEM	QTY	MFG.	I/O PART NO.	DESCRIPTION
2	"X"	I/O	120-410-020	MODULAR CABLE, 26 AWG (7/34) BARE COPPER, 4 CONDUCTOR, UNSHIELDED, WHITE PVC.
1	1 PC	I/O	325-641-50X	CONNECTOR, MODULAR PLUG, 6 POSITION, 4 CONDUCTOR, 50u" Au, FLAT TYPE EXIT.

CABLE ASSEMBLY PARTS LIST

THIRD ANGLE PROJECTION

UNLESS OTHERWISE NOTED:
1) DIMENSIONS ARE IN INCHES [MILLIMETER]
2) TOLERANCES:
X.XX ± 0.25 [6.35]

I/O INTERCONNECT
SANTA ANA, CALIFORNIA

TITLE: 6P4C MODULAR TO OPEN END, WHITE, CABLE ASSEMBLY

PART NO: 464-XX4-522-D
DWG NO: 464-XX4-522-D
CUSTOMER: DIGI KEY
REV. X1
SCALE: NONE
SHEET 1 OF 1

THESE DRAWINGS AND SPECIFICATIONS ARE THE SOLE PROPERTY OF I/O INTERCONNECT INC., U.S.A. AND SHALL NOT BE REPRODUCED, COPIED, OR USED IN ANY MANNER WITHOUT THE PRIOR WRITTEN CONSENT OF I/O INTERCONNECT INC. OR ITS AFFILIATED SUBSIDIARIES.

DWG. NO.	ZONE	REV.	DESCRIPTION	DATE	APPROVED
XX4-521-D		X1	CUSTOMER APPROVAL	03/24/99	E.W.

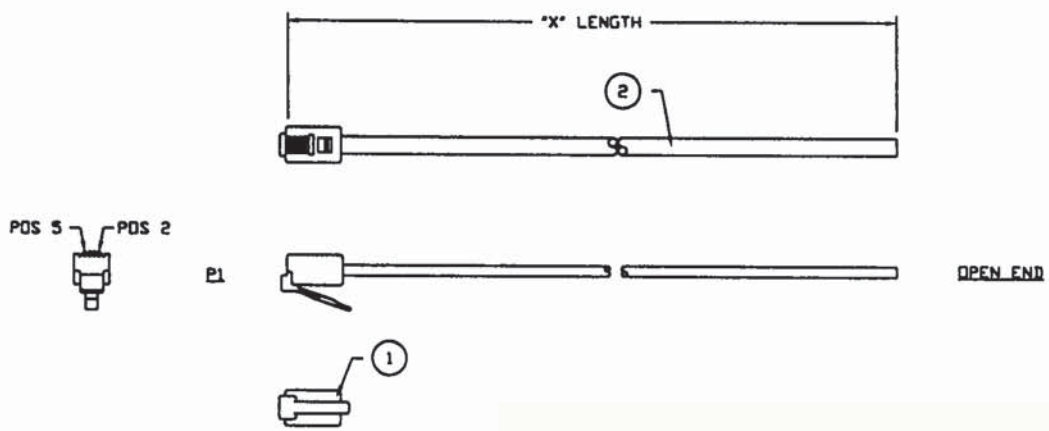

WIRE DIAGRAM

P1	OPEN END
2	BLACK
3	RED
4	GREEN
5	YELLOW

CUSTOMER APPROVAL
ENGR. SIGN Matt Nemec
DATE: 4-12-99

H3642-25-ND
H3642-14-ND
H3642-07-ND

PART NUMBER I/O INTERCONNECT	LENGTH "X"
464-254-521-D	25.0 FT ± 4.0 IN 7.62 M ± 101.6 MM
464-144-521-D	14.0 FT ± 3.0 IN 4.27 M ± 76.2 MM
464-074-521-D	7.0 FT ± 2.0 IN 2.13 M ± 50.8 MM

NOTES: UNLESS OTHERWISE SPECIFIED.

1. CABLE TO BE BUNDLED AND TWIST TIED.
2. TEST CABLE FOR ALL OPENS & SHORTS.
3. PACKAGE CABLE ASSEMBLY INDIVIDUALLY IN PLASTIC BAG. PACKAGE INDIVIDUAL BAG PER LOT NUMBER QUANTITIES.

ITEM	QTY	MFG.	IOI PART NO.	DESCRIPTION
2	"X"	IOI	120-410-010	MODULAR CABLE, 26 AWG (7/34) BARE COPPER, 4 CONDUCTOR, UNSHIELDED, BLACK PVC.
1	1 PC	IOI	325-641-50X	CONNECTOR, MODULAR PLUG, 6 POSITION, 4 CONDUCTOR, 50u" Au, FLAT TYPE EXIT.

CABLE ASSEMBLY PARTS LIST

THIRD ANGLE PROJECTION

UNLESS OTHERWISE NOTED:
1) DIMENSIONS ARE IN INCHES (MILLIMETER)
2) TOLERANCES:
X.XX ± 0.25 (6.35)

I/O INTERCONNECT
SANTA ANA, CALIFORNIA

TITLE: 6P4C MODULAR TO OPEN END, BLACK, CABLE ASSEMBLY

PART NO: 464-XX4-521-D
DWG NO: 464-XX4-521-D
CUSTOMER: DIGI KEY
REV. X1
SCALE: NONE
SHEET 1 OF 1

THESE DRAWINGS AND SPECIFICATIONS ARE THE SOLE PROPERTY OF I/O INTERCONNECT INC., U.S.A. AND SHALL NOT BE REPRODUCED, COPIED, OR USED IN ANY MANNER WITHOUT THE PRIOR WRITTEN CONSENT OF I/O INTERCONNECT INC. OR ITS AFFILIATED SUBSIDIARIES.

DWG. NO.	ZONE	REV.	DESCRIPTION	DATE	APPROVED
XX4-520-D		X1	CUSTOMER APPROVAL	03/24/99	E.V.

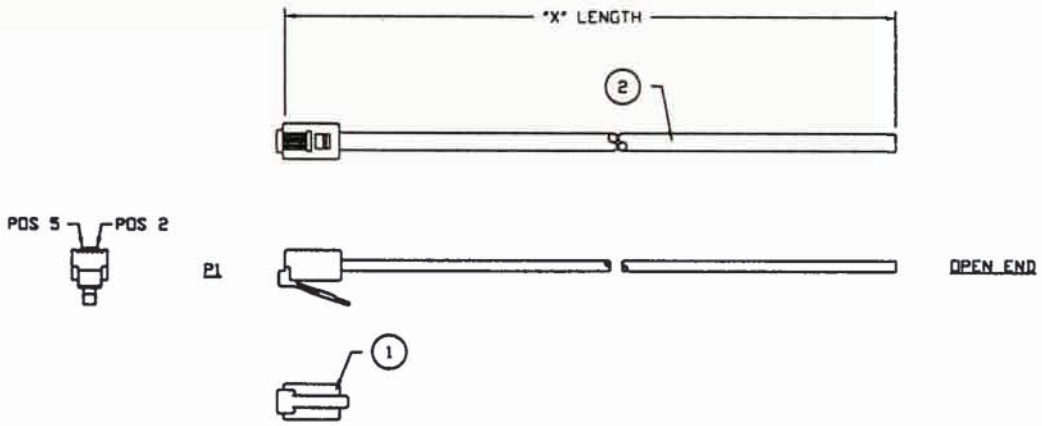

WIRE DIAGRAM

P1	OPEN END
2	BLACK
3	RED
4	GREEN
5	YELLOW

CUSTOMER APPROVAL
ENGR. SIGN Matt Nemec
DATE: 4-12-99

H3643-25-ND
H3643-14-ND
H3643-07-ND

PART NUMBER I/O INTERCONNECT	LENGTH "X"
464-254-520-D	25.0 FT ± 4.0 IN 7.62 M ± 101.6 MM
464-144-520-D	14.0 FT ± 3.0 IN 4.27 M ± 76.2 MM
464-074-520-D	7.0 FT ± 2.0 IN 2.13 M ± 50.8 MM

NOTES: UNLESS OTHERWISE SPECIFIED.

1. CABLE TO BE BUNDLED AND TWIST TIED.
2. TEST CABLE FOR ALL OPENS & SHORTS.
3. PACKAGE CABLE ASSEMBLY INDIVIDUALLY IN PLASTIC BAG. PACKAGE INDIVIDUAL BAG PER LOT NUMBER QUANTITIES.

ITEM	QTY	MFG.	IOI PART NO.	DESCRIPTION
2	"X"	IOI	120-410-000	MODULAR CABLE, 26 AWG (7/34) BARE COPPER, 4 CONDUCTOR, UNSHIELDED, SILVER SATIN PVC.
1	1 PC	IOI	325-641-50X	CONNECTOR, MODULAR PLUG, 6 POSITION, 4 CONDUCTOR, 50u" Au, FLAT TYPE EXIT.

CABLE ASSEMBLY PARTS LIST

THIRD ANGLE PROJECTION

UNLESS OTHERWISE NOTED:
1) DIMENSIONS ARE IN INCHES (MILLIMETER)
2) TOLERANCES:
X.XX ± 0.25 (6.35)

I/O INTERCONNECT
SANTA ANA, CALIFORNIA

TITLE: 6P4C MODULAR TO OPEN END, SILVER SATIN, CABLE ASSEMBLY

PART NO: 464-XX4-520-D
DWG NO: 464-XX4-520-D
CUSTOMER: DIGI KEY
REV. X1
SCALE: NONE
SHEET 1 OF 1

THESE DRAWINGS AND SPECIFICATIONS ARE THE SOLE PROPERTY OF I/O INTERCONNECT INC., U.S.A. AND SHALL NOT BE REPRODUCED, COPIED, OR USED IN ANY MANNER WITHOUT THE PRIOR WRITTEN CONSENT OF I/O INTERCONNECT INC. OR ITS AFFILIATED SUBSIDIARIES.

DWG. NO.	ZONE	REV.	DESCRIPTION	DATE	APPROVED
XX4-512-D		X1	CUSTOMER APPROVAL	03/24/99	E.W.

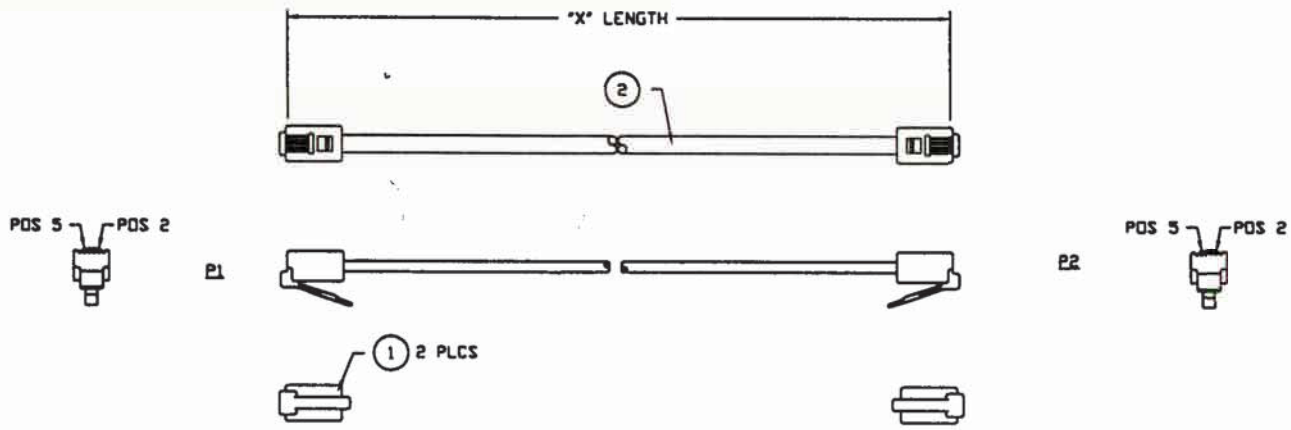

WIRE DIAGRAM

P1		P2
2	BLACK	5
3	RED	4
4	GREEN	3
5	YELLOW	2

CUSTOMER APPROVAL
ENGR. SIGN Matt Nemec
DATE: 4-12-99

H1641-25-ND
H1641-14-ND
H1641-07-ND

PART NUMBER I/O INTERCONNECT	LENGTH "X"
464-254-512-D	25.0 FT ± 4.0 IN 7.62 M ± 101.6 MM
464-144-512-D	14.0 FT ± 3.0 IN 4.27 M ± 76.2 MM
464-074-512-D	7.0 FT ± 2.0 IN 2.13 M ± 50.8 MM

NOTES: UNLESS OTHERWISE SPECIFIED.

1. CABLE TO BE BUNDLED AND TWIST TIED.
2. TEST CABLE FOR ALL OPENS & SHORTS.
3. PACKAGE CABLE ASSEMBLY INDIVIDUALLY IN PLASTIC BAG. PACKAGE INDIVIDUAL BAG PER LOT NUMBER QUANTITIES.

THIRD ANGLE PROJECTION

UNLESS OTHERWISE NOTED:
1) DIMENSIONS ARE IN INCHES (MILLIMETER)
2) TOLERANCES:
X.XX ± 0.25 (6.35)

I/O INTERCONNECT
SANTA ANA, CALIFORNIA

TITLE: 6P4C MODULAR, STANDARD STYLE, WHITE, CABLE ASSEMBLY

PART NO.: 464-XX4-512-D
DWG NO.: 464-XX4-512-D
CUSTOMER: DIGI KEY
REV. X1
SCALE: NONE
SHEET 1 OF 1

ITEM	QTY	MFG.	PART NO.	DESCRIPTION
2	"X"	IOI	120-410-020	MODULAR CABLE, 26 AVG (7/34) BARE COPPER, 4 CONDUCTOR, UNSHIELDED, WHITE PVC.
1	2 PCS	IOI	325-641-50X	CONNECTOR, MODULAR PLUG, 6 POSITION, 4 CONDUCTOR, 50u" Au, FLAT TYPE EXIT.

CABLE ASSEMBLY PARTS LIST

THESE DRAWINGS AND SPECIFICATIONS ARE THE SOLE PROPERTY OF I/O INTERCONNECT INC., U.S.A. AND SHALL NOT BE REPRODUCED, COPIED, OR USED IN ANY MANNER WITHOUT THE PRIOR WRITTEN CONSENT OF I/O INTERCONNECT INC. OR ITS AFFILIATED SUBSIDIARIES.

DWG. NO.	ZONE	REV.	DESCRIPTION	DATE	APPROVED
XX4-511-D		X1	CUSTOMER APPROVAL	03/24/99	E.V.

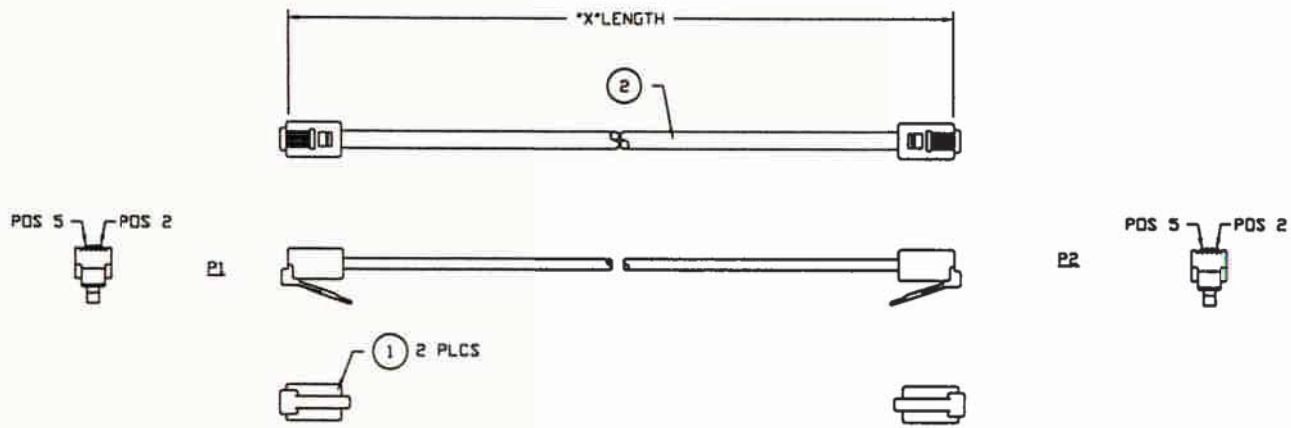

WIRE DIAGRAM

P1		P2
2	BLACK	5
3	RED	4
4	GREEN	3
5	YELLOW	2

CUSTOMER APPROVAL
ENGR. SIGN Matt Nemec
DATE: 4-12-99

NOTES: UNLESS OTHERWISE SPECIFIED.

1. CABLE TO BE BUNDLED AND TWIST TIED.
2. TEST CABLE FOR ALL OPENS & SHORTS.
3. PACKAGE CABLE ASSEMBLY INDIVIDUALLY IN PLASTIC BAG. PACKAGE INDIVIDUAL BAG PER LOT NUMBER QUANTITIES.

PART NUMBER I/O INTERCONNECT	LENGTH "X"
H1642-25-ND 464-254-511-D	25.0 FT ± 4.0 IN 7.62 M ± 101.6 MM
H1642-14-ND 464-144-511-D	14.0 FT ± 3.0 IN 4.27 M ± 76.2 MM
H1642-07-ND 464-074-511-D	7.0 FT ± 2.0 IN 2.13 M ± 50.8 MM

ITEM	QTY	MFG.	IOI PART NO.	DESCRIPTION
2	"X"	IOI	120-410-010	MODULAR CABLE, 26 AWG (7/34) BARE COPPER, 4 CONDUCTOR, UNSHIELDED, BLACK PVC.
1	2 PCS	IOI	325-641-50X	CONNECTOR, MODULAR PLUG, 6 POSITION, 4 CONDUCTOR, 50u" Au, FLAT TYPE EXIT.

CABLE ASSEMBLY PARTS LIST

THIRD ANGLE PROJECTION

UNLESS OTHERWISE NOTED:
1) DIMENSIONS ARE IN INCHES (MILLIMETER)
2) TOLERANCES: X.XX ± 0.25 (6.35)

I/O INTERCONNECT
SANTA ANA, CALIFORNIA

TITLE: 6P4C MODULAR, STANDARD STYLE, BLACK, CABLE ASSEMBLY

PART NO: 464-XX4-511-D
DWG NO: 464-XX4-511-D
CUSTOMER: DIGI KEY
REV. X1
SCALE: NONE
SHEET 1 OF 1

THESE DRAWINGS AND SPECIFICATIONS ARE THE SOLE PROPERTY OF I/O INTERCONNECT INC., U.S.A. AND SHALL NOT BE REPRODUCED, COPIED, OR USED IN ANY MANNER WITHOUT THE PRIOR WRITTEN CONSENT OF I/O INTERCONNECT INC. OR ITS AFFILIATED SUBSIDIARIES.

DWG. NO.	ZONE	REV.	DESCRIPTION	DATE	APPROVED
XX4-510-D		X1	CUSTOMER APPROVAL	03/24/99	E.W.

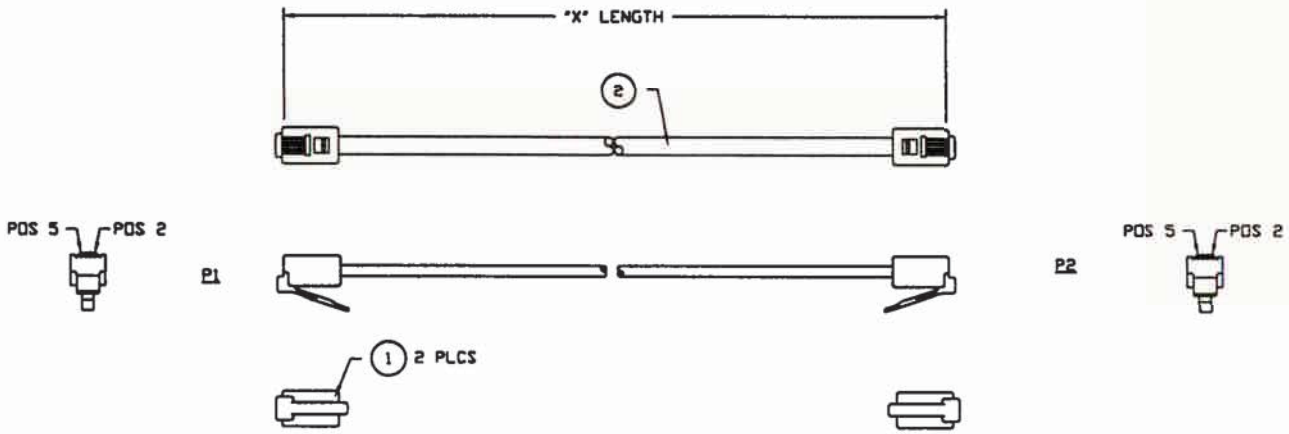

WIRE DIAGRAM

P1		P2
2	BLACK	5
3	RED	4
4	GREEN	3
5	YELLOW	2

CUSTOMER APPROVAL
ENGR. SIGN Matt Nemec
DATE: 4-12-99

NOTES: UNLESS OTHERWISE SPECIFIED.

1. CABLE TO BE BUNDLED AND TWIST TIED.
2. TEST CABLE FOR ALL OPENS & SHORTS.
3. PACKAGE CABLE ASSEMBLY INDIVIDUALLY IN PLASTIC BAG. PACKAGE INDIVIDUAL BAG PER LOT NUMBER QUANTITIES.

	PART NUMBER I/O INTERCONNECT	LENGTH "X"
H1643-25-ND	464-254-510-D	25.0 FT ± 4.0 IN 7.62 M ± 101.6 MM
H1643-14-ND	464-144-510-D	14.0 FT ± 3.0 IN 4.27 M ± 76.2 MM
H1643-07-ND	464-074-510-D	7.0 FT ± 2.0 IN 2.13 M ± 50.8 MM

ITEM	QTY	MFG.	IOI PART NO.	DESCRIPTION
2	"X"	IOI	120-410-000	MODULAR CABLE, 26 AWG (7/34) BARE COPPER, 4 CONDUCTOR, UNSHIELDED, SILVER SATIN PVC.
1	2 PCS	IOI	325-641-50X	CONNECTOR, MODULAR PLUG, 6 POSITION, 4 CONDUCTOR, 50u" Au, FLAT TYPE EXIT.

CABLE ASSEMBLY PARTS LIST

THIRD ANGLE PROJECTION

UNLESS OTHERWISE NOTED:
1) DIMENSIONS ARE IN INCHES (MILLIMETER)
2) TOLERANCES:
X.XX ± 0.25 (6.35)

I/O INTERCONNECT
SANTA ANA, CALIFORNIA

TITLE: 6P4C MODULAR, STANDARD STYLE, SILVER SATIN, CABLE ASSEMBLY

PART NO: 464-XX4-510-D
DWG NO: 464-XX4-510-D
CUSTOMER: DIGI KEY
REV. X1
SCALE: NONE
SHEET 1 OF 1

THESE DRAWINGS AND SPECIFICATIONS ARE THE SOLE PROPERTY OF I/O INTERCONNECT INC., U.S.A. AND SHALL NOT BE REPRODUCED, COPIED, OR USED IN ANY MANNER WITHOUT THE PRIOR WRITTEN CONSENT OF I/O INTERCONNECT INC. OR ITS AFFILIATED SUBSIDIARIES.

DWG. NO.	ZONE	REV.	DESCRIPTION	DATE	APPROVED
XX4-502-D		X1	CUSTOMER APPROVAL	03/24/99	E.W.

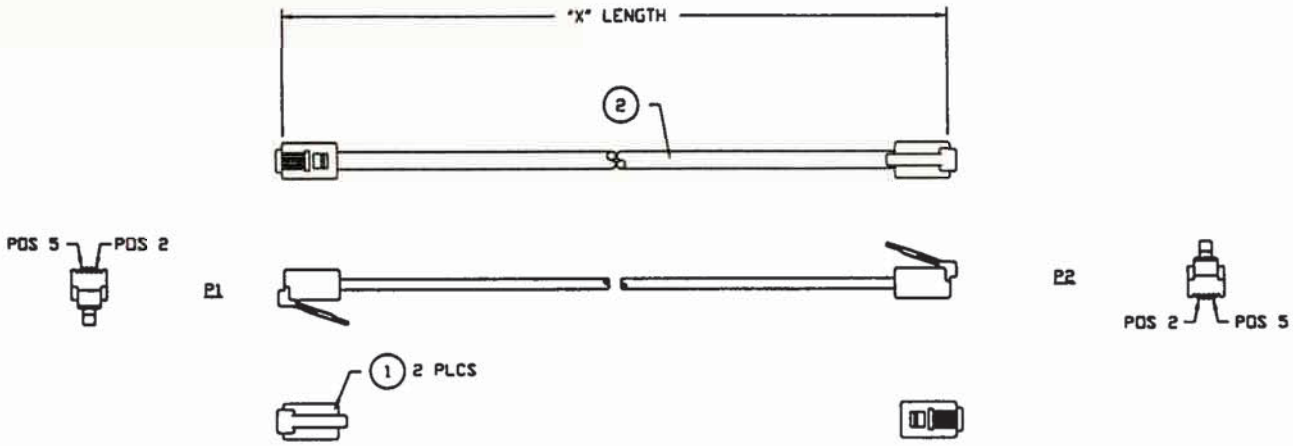

WIRE DIAGRAM

P1		P2
2	BLACK	2
3	RED	3
4	GREEN	4
5	YELLOW	5

CUSTOMER APPROVAL
ENGR. SIGN Matt Nemec
DATE: 4-12-99

H2641-25-ND
H2641-14-ND
H2641-07-ND

PART NUMBER I/O INTERCONNECT	LENGTH "X"
464-254-502-D	25.0 FT ± 4.0 IN 7.62 M ± 101.6 MM
464-144-502-D	14.0 FT ± 3.0 IN 4.27 M ± 76.2 MM
464-074-502-D	7.0 FT ± 2.0 IN 2.13 M ± 50.8 MM

NOTES: UNLESS OTHERWISE SPECIFIED.

1. CABLE TO BE BUNDLED AND TWIST TIED.
2. TEST CABLE FOR ALL OPENS & SHORTS.
3. PACKAGE CABLE ASSEMBLY INDIVIDUALLY IN PLASTIC BAG. PACKAGE INDIVIDUAL BAG PER LOT NUMBER QUANTITIES.

ITEM	QTY	MFG.	I/O PART NO.	DESCRIPTION
2	"X"	I/O	120-410-020	MODULAR CABLE, 26 AWG (7/34) BARE COPPER, 4 CONDUCTOR, UNSHIELDED, WHITE PVC.
1	2 PCS	I/O	325-641-50X	CONNECTOR, MODULAR PLUG, 6 POSITION, 4 CONDUCTOR, 50u" Au, FLAT TYPE EXIT.

CABLE ASSEMBLY PARTS LIST

THIRD ANGLE PROJECTION

UNLESS OTHERWISE NOTED:
1) DIMENSIONS ARE IN INCHES [MILLIMETER]
2) TOLERANCES:
X.XX ± 0.25 [6.35]

I/O INTERCONNECT
SANTA ANA, CALIFORNIA

TITLE: 6P4C MODULAR, REVERT STYLE, WHITE, CABLE ASSEMBLY

PART NO.: 464-XX4-502-D
DWG NO.: 464-XX4-502-D
CUSTOMER: DIGI KEY
REV. X1
SCALE: NONE
SHEET 1 OF 1

THESE DRAWINGS AND SPECIFICATIONS ARE THE SOLE PROPERTY OF I/O INTERCONNECT INC., U.S.A. AND SHALL NOT BE REPRODUCED, COPIED, OR USED IN ANY MANNER WITHOUT THE PRIOR WRITTEN CONSENT OF I/O INTERCONNECT INC. OR ITS AFFILIATED SUBSIDIARIES.

DWG. NO.	ZONE	REV.	DESCRIPTION	DATE	APPROVED
XX4-501-D		X1	CUSTOMER APPROVAL	03/24/99	E.W.

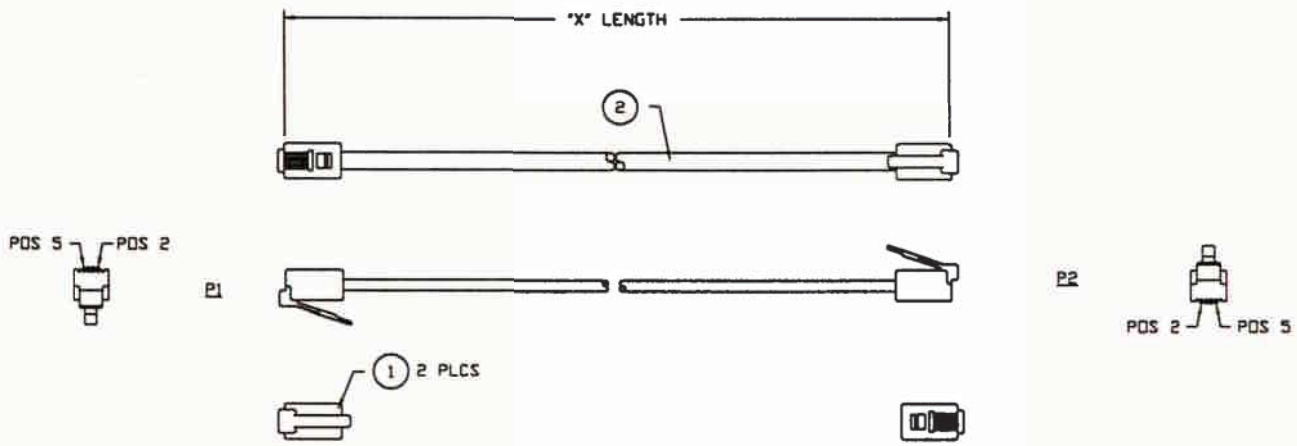

WIRE DIAGRAM

P1		P2
2	BLACK	2
3	RED	3
4	GREEN	4
5	YELLOW	5

CUSTOMER APPROVAL
ENGR. SIGN Matt Nemec
DATE: 4-12-99

H2642-25-ND
H2642-14-ND
H2642-07-ND

PART NUMBER I/O INTERCONNECT	LENGTH "X"
464-254-501-D	25.0 FT ± 4.0 IN 7.62 M ± 101.6 MM
464-144-501-D	14.0 FT ± 3.0 IN 4.27 M ± 76.2 MM
464-074-501-D	7.0 FT ± 2.0 IN 2.13 M ± 50.8 MM

NOTES: UNLESS OTHERWISE SPECIFIED.

1. CABLE TO BE BUNDLED AND TWIST TIED.
2. TEST CABLE FOR ALL OPENS & SHORTS.
3. PACKAGE CABLE ASSEMBLY INDIVIDUALLY IN PLASTIC BAG. PACKAGE INDIVIDUAL BAG PER LOT NUMBER QUANTITIES.

ITEM	QTY	MFG.	I01 PART NO.	DESCRIPTION
2	"X"	I01	120-410-010	MODULAR CABLE, 26 AWG (7/34) BARE COPPER, 4 CONDUCTOR, UNSHIELDED, BLACK PVC.
1	2 PCS	I01	325-641-50X	CONNECTOR, MODULAR PLUG, 6 POSITION, 4 CONDUCTOR, 50u" Au, FLAT TYPE EXIT.

CABLE ASSEMBLY PARTS LIST

THIRD ANGLE PROJECTION

UNLESS OTHERWISE NOTED:
1) DIMENSIONS ARE IN INCHES (MILLIMETER)
2) TOLERANCES:
X.XX ± 0.25 (6.35)

I/O INTERCONNECT
SANTA ANA, CALIFORNIA

TITLE: 6P4C MODULAR, REVERT STYLE, BLACK, CABLE ASSEMBLY

PART NO: 464-XX4-501-D
DWG NO: 464-XX4-501-D
CUSTOMER: DIGI KEY
REV. X1
SCALE: NONE
SHEET 1 OF 1

THESE DRAWINGS AND SPECIFICATIONS ARE THE SOLE PROPERTY OF I/O INTERCONNECT INC., U.S.A. AND SHALL NOT BE REPRODUCED, COPIED, OR USED IN ANY MANNER WITHOUT THE PRIOR WRITTEN CONSENT OF I/O INTERCONNECT INC. OR ITS AFFILIATED SUBSIDIARIES.

DWG. NO.	ZONE	REV.	DESCRIPTION	DATE	APPROVED
XX4-500-D		X1	CUSTOMER APPROVAL	03/24/99	E.V.

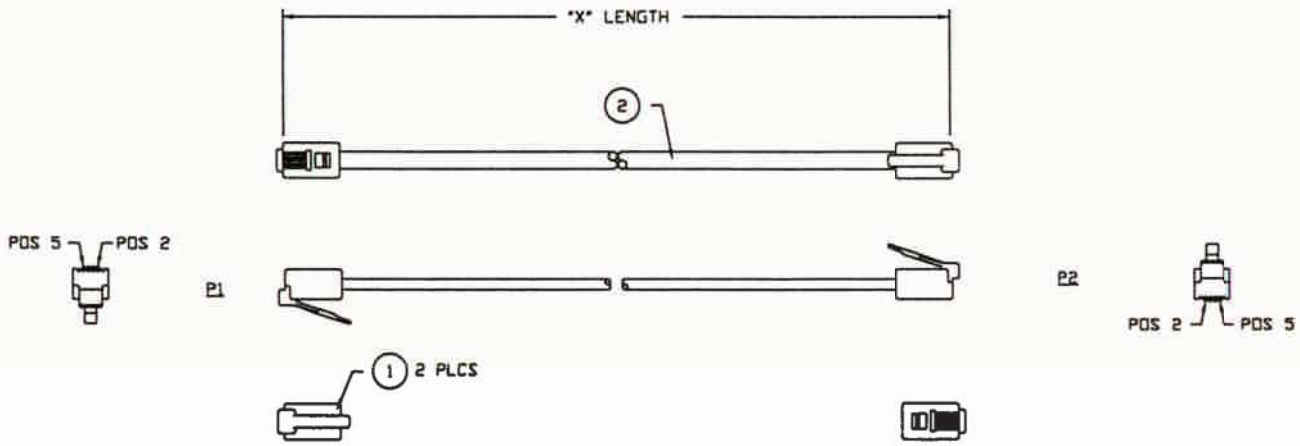

WIRE DIAGRAM

P1		P2
2	BLACK	2
3	RED	3
4	GREEN	4
5	YELLOW	5

CUSTOMER APPROVAL
ENGR. SIGN Matt Lemus
DATE: 4-12-99

H2643-25-ND
H2643-14-ND
H2643-07-ND

PART NUMBER I/O INTERCONNECT	LENGTH "X"
464-254-500-D	25.0 FT ± 4.0 IN 7.62 M ± 101.6 MM
464-144-500-D	14.0 FT ± 3.0 IN 4.27 M ± 76.2 MM
464-074-500-D	7.0 FT ± 2.0 IN 2.13 M ± 50.8 MM

NOTES: UNLESS OTHERWISE SPECIFIED.

1. CABLE TO BE BUNDLED AND TWIST TIED.
2. TEST CABLE FOR ALL OPENS & SHORTS.
3. PACKAGE CABLE ASSEMBLY INDIVIDUALLY IN PLASTIC BAG. PACKAGE INDIVIDUAL BAG PER LOT NUMBER QUANTITIES.

ITEM	QTY	MFG.	IOI PART NO.	DESCRIPTION
2	"X"	IOI	120-410-000	MODULAR CABLE, 26 AWG (7/34) BARE COPPER, 4 CONDUCTOR, UNSHIELDED, SILVER SATIN PVC.
1	2 PCS	IOI	325-641-50X	CONNECTOR, MODULAR PLUG, 6 POSITION, 4 CONDUCTOR, 50u" Au, FLAT TYPE EXIT.

CABLE ASSEMBLY PARTS LIST

THIRD ANGLE PROJECTION

UNLESS OTHERWISE NOTED:
1) DIMENSIONS ARE IN INCHES [MILLIMETER]
2) TOLERANCES:
X.XX ± 0.25 [6.35]

I/O INTERCONNECT
SANTA ANA, CALIFORNIA

TITLE: 6P4C MODULAR, REVERT STYLE, SILVER SATIN, CABLE ASSEMBLY

PART NO.: 464-XX4-500-D
DWG NO.: 464-XX4-500-D
CUSTOMER: DIGI KEY
REV. X1
SCALE: NONE
SHEET 1 OF 1