| PART NAME | HAND-HELD PLASTIC BOX, STYLE 2 | PART NO. | HP-3650-B | REVISION DATE | 2-6-2009 |
|---|---|---|---|---|---|

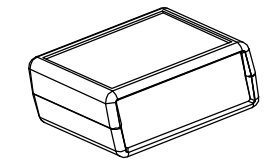

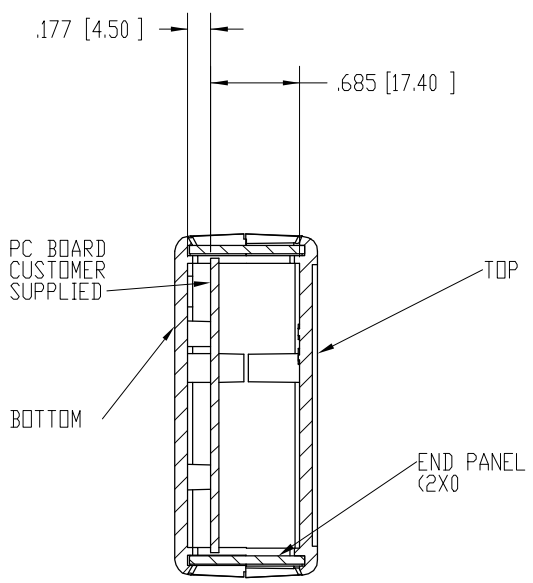


SECTION F-F

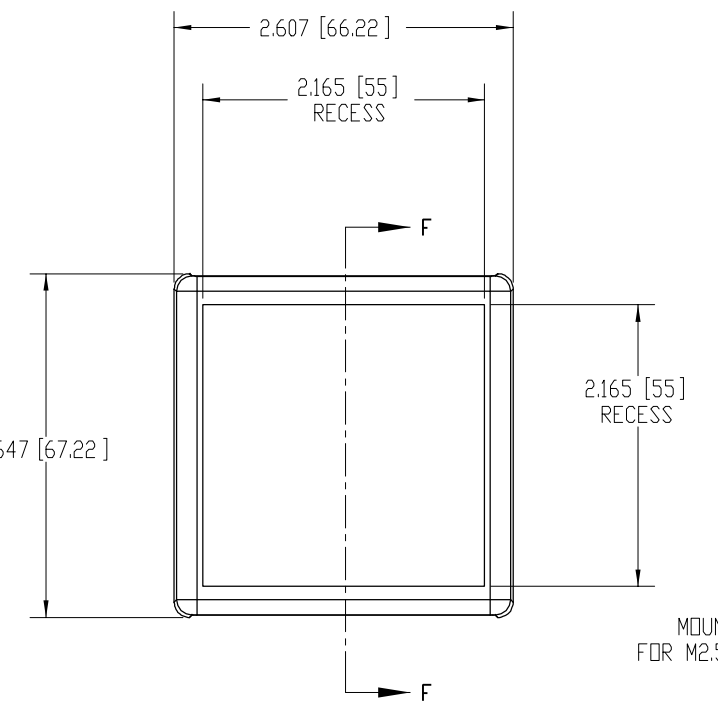


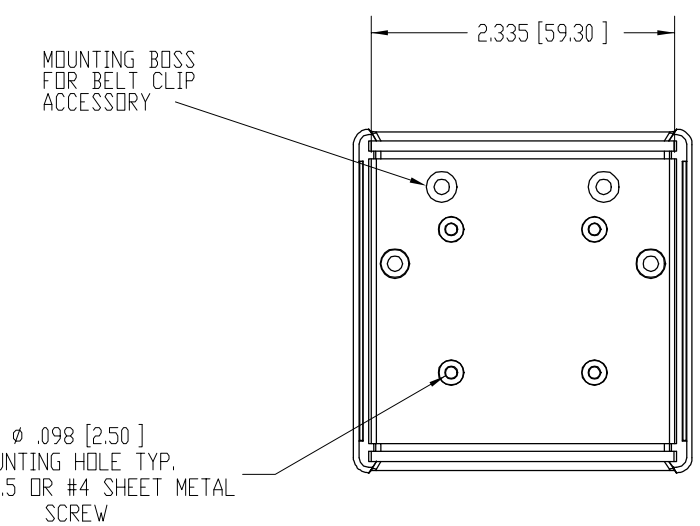


VIEW OF BOTTOM HALF

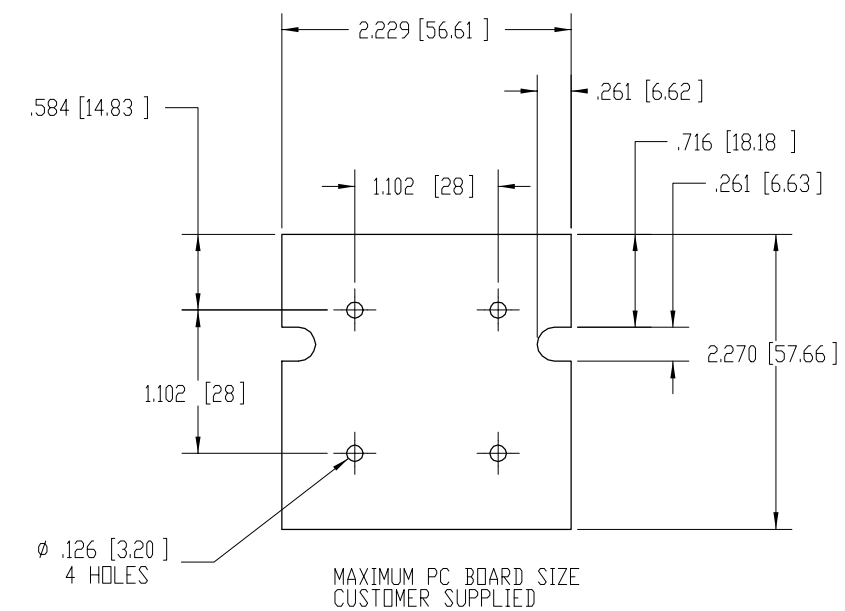


MAXIMUM PC BOARD SIZE
CUSTOMER SUPPLIED

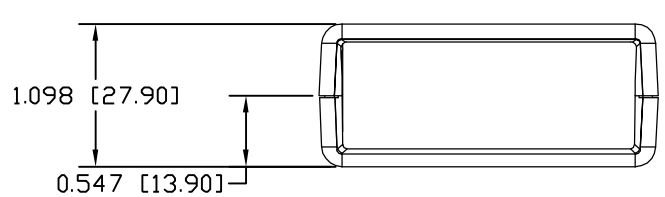


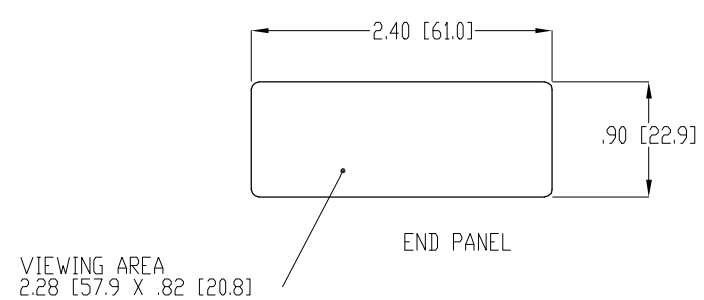


END PANEL

MATERIAL AND FINISH:

BLACK HIGH-IMPACT ABS (UL94-HB) - TOP, BOTTOM, AND END PANEL

TWO (2) M3 X .63 [16] LG SCREWS SUPPLIED FOR ASSEMBLY

OPTIONAL ACCESSORIES:
INFRARED PANELS P/N HP-3645
BELT CLIP (BLACK) P/N HH-3595-BCB