THIS DRAWING IS UNPUBLISHED. RELEASED FOR PUBLICATION -,- .
© COPYRIGHT 2011 BY TYCO ELECTRONICS CORPORATION. ALL RIGHTS RESERVED.

| LOC | DIST |
|---|---|
| DW | — |

REVISIONS

| P | LTR | DESCRIPTION | DATE | DWN | APVD |
|---|---|---|---|---|---|
| | A | REVISED (ECO-11-013077) | 23JUN'11 | J.C. | W.K. |

NOTE:
1. MATERIAL:
   HOUSING: THERMOPLASTIC (SEE TABLE), UL 94V-0,
   COLOR: (SEE TABLE).
   CONTACT: PHOSPHOR BRONZE, THICKNESS=0.25mm.
   SHELL: PHOSPHOR BRONZE, THICKNESS=0.30mm.
   BACK SHELL : STAINLESS STEEL, THICKNESS=0.30mm.
2. FINISH:
   CONTACT: GOLD FLASH OVER
   30u" MIN. PALLADIUM-NICKEL PLATED ON CONTACT AREA,
   100u" MIN. MATTE-TIN PLATED ON SOLDER TAILS,
   50u" MIN. NICKEL UNDERPLATED ALL OVER.
   SHELL: 100u" MIN. BRIGHT TIN OVER 50u" MIN. NICKEL UNDERPLATED.

3. WAVE SOLDER CAPABLE TO 265°C PER TE SPEC 109-202, CONDITION B.

4. REFLOW SOLDER CAPABLE TO 260°C PER TE SPEC 109-201, CONDITION B.

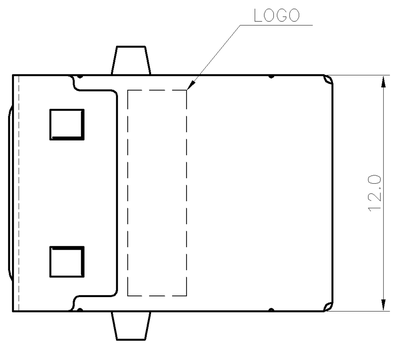


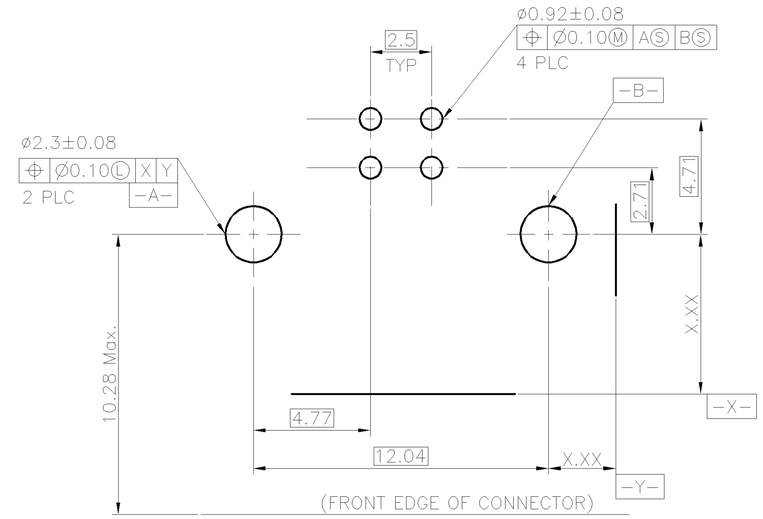


RECOMMENDED PCB LAYOUT(TOLERANCE: ±0.05)

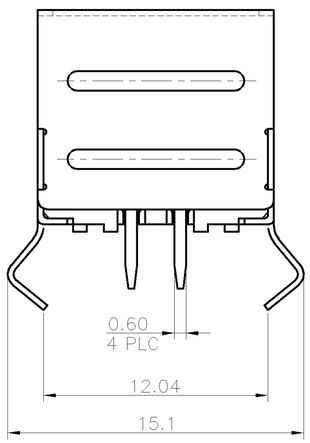


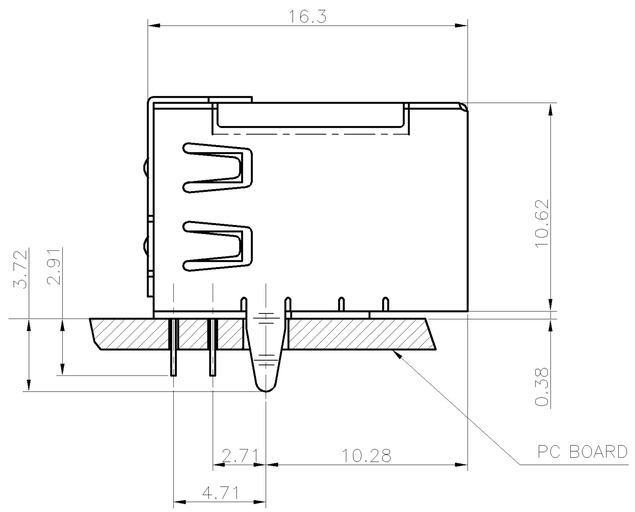


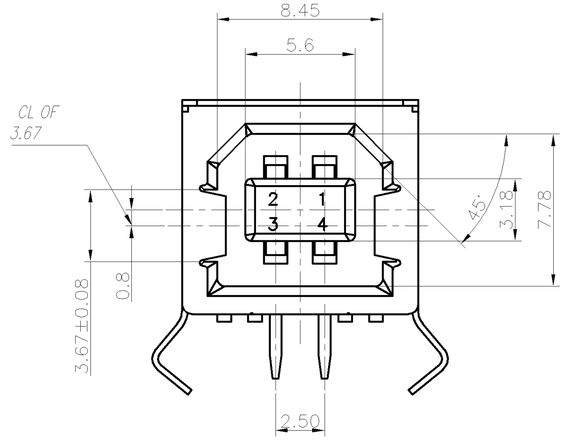


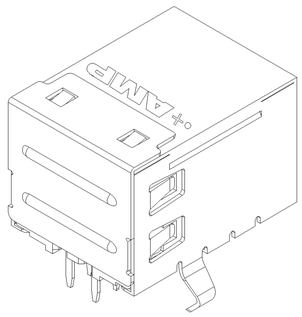

| | | | |
|---|---|---|---|
| 4 | HIGH TEMP. THERMOPLASTIC | NATURAL | 4-1734376-8 |
| 3 | THERMOPLASTIC | WHITE | 4-1734376-7 |
| SOLDERING PROCESS | HOUSING MATERIAL | COLOR | PART NUMBER |

THIS DRAWING IS A CONTROLLED DOCUMENT.

DIMENSIONS: mm

TOLERANCES UNLESS OTHERWISE SPECIFIED:

| | |
|---|---|
| 0 PLC | ± 0.38 |
| 1 PLC | ± 0.25 |
| 2 PLC | ± 0.13 |
| 3 PLC | ± 0.05 |
| 4 PLC | ± - |
| ANGLES | ± - |

MATERIAL: SEE NOTE

FINISH: SEE NOTE

| | | |
|---|---|---|
| DWN | O. HU | 01JUN2005 |
| CHK | S. HOU | 01JUN2005 |
| APVD | W.J. KE | 01JUN2005 |
| PRODUCT SPEC | 108-57538 | |
| APPLICATION SPEC | — | |
| WEIGHT | 3.89 GRAMS | |

TE Connectivity

NAME: USB CONN. SERIES B, 4P, R/A, THRU HOLE, W/ BACK SHELL

| SIZE | CAGE CODE | DRAWING NO | RESTRICTED TO |
|---|---|---|---|
| A3 | 00779 | C-1734376 | — |

CUSTOMER DRAWING | SCALE — | SHEET 1 OF 2 | REV A

THIS DRAWING IS UNPUBLISHED. RELEASED FOR PUBLICATION -,- .
© COPYRIGHT 2011 BY TYCO ELECTRONICS CORPORATION. ALL RIGHTS RESERVED.

| LOC | DIST |
|---|---|
| DW | — |

REVISIONS

| P | LTR | DESCRIPTION | DATE | DWN | APVD |
|---|---|---|---|---|---|
| | | SEE SHEET 1. | | | |

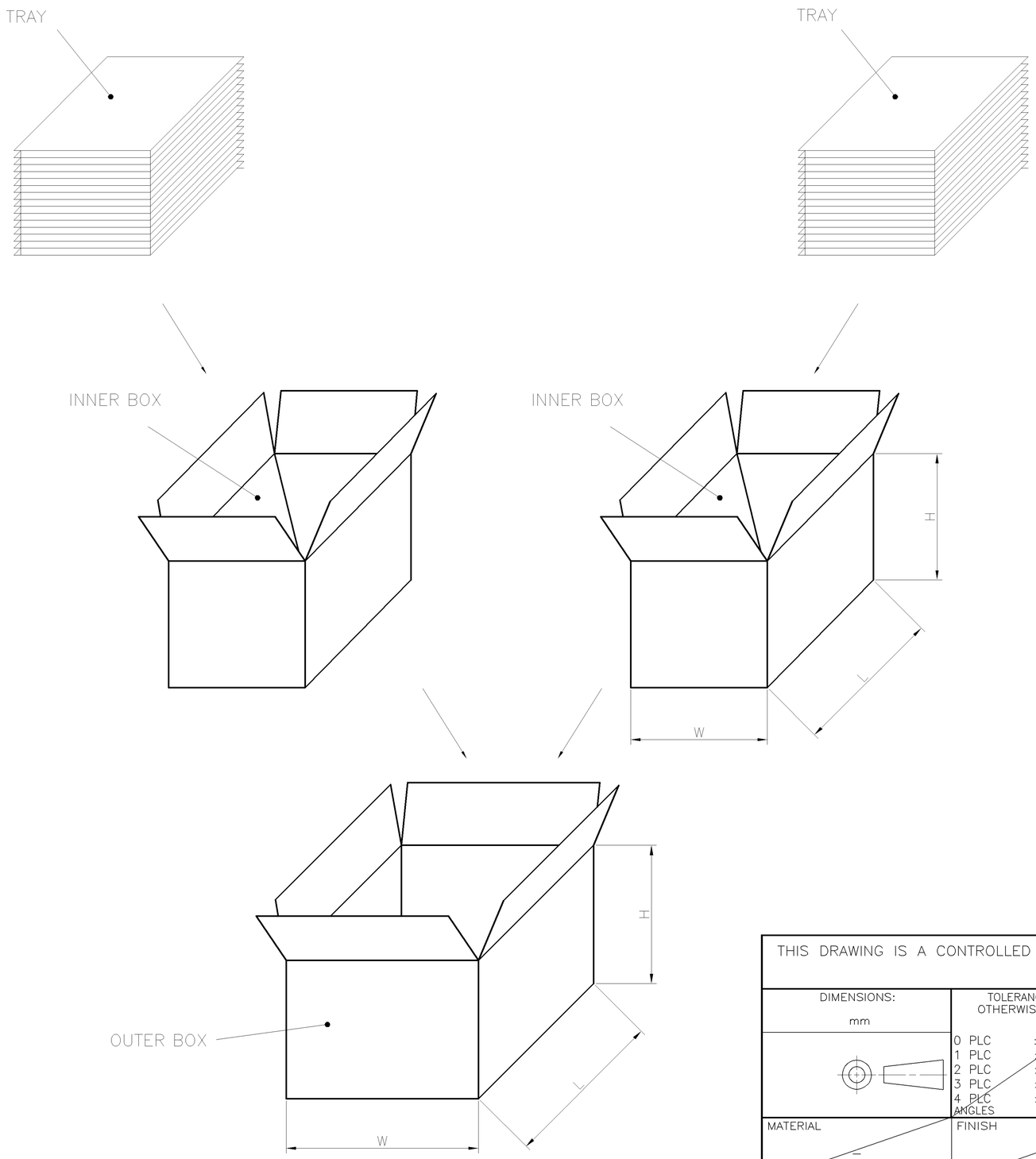


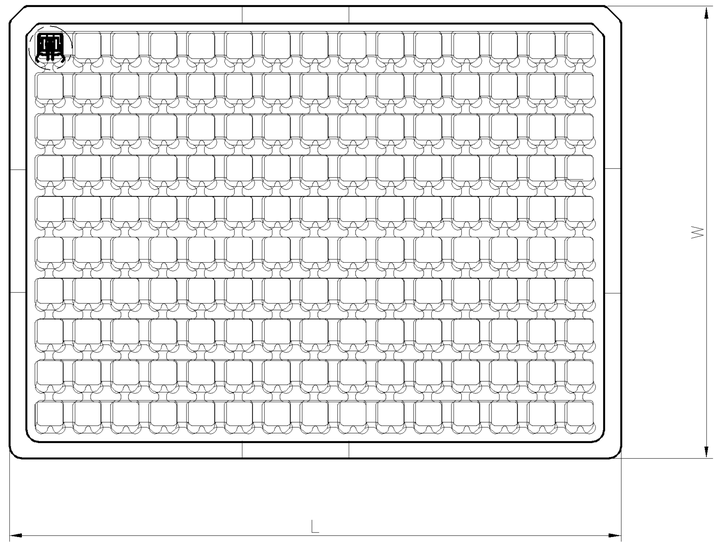


TRAY LAYOUT

NOTE:
1. MATERIAL:
   TRAY : PS.
   INNER BOX : CORRUGATED FIBERBOARD.
   SHIPPING CARTON : CORRUGATED FIBERBOARD.
2. DIMENSION:
   TRAY : L=315, W=230, H=18mm.
   INNER BOX : L=330, W=245, H=227mm.
   SHIPPING CARTON : L=509, W=345, H=248mm.
3. QUANTITY:
   PRIMARY PACKING : 150 PCS/TRAY.
   SECONDARY PACKING : 12 TRAY/CARTON(1,800PCS).
   THIRDLY PACKING : 2 INNER BOX/CARTON(3,600PCS).
4. WEIGHT:
   NET WEIGHT : 9.0kg.
   GROSS WEIGHT : 10.0kg.

THIS DRAWING IS A CONTROLLED DOCUMENT.

DIMENSIONS: mm

TOLERANCES UNLESS OTHERWISE SPECIFIED:
0 PLC ± –
1 PLC ± –
2 PLC ± –
3 PLC ± –
4 PLC ± –
ANGLES ± –

MATERIAL –
FINISH –

DWN –
CHK –
APVD –
PRODUCT SPEC –
APPLICATION SPEC –
WEIGHT –

TE Connectivity

NAME
USB CONN. SERIES B, 4P, R/A, THRU HOLE, W/ BACK SHELL

| SIZE | CAGE CODE | DRAWING NO | RESTRICTED TO |
|---|---|---|---|
| A3 | 00779 | C-1734376 | — |

CUSTOMER DRAWING | SCALE — | SHEET 2 OF 2 | REV A