REV.	DATE	DESCRIPTION
A	08/28/00	REVISE OLD PRINT
B	05/30/04	UPDATE DRAWING FORMAT

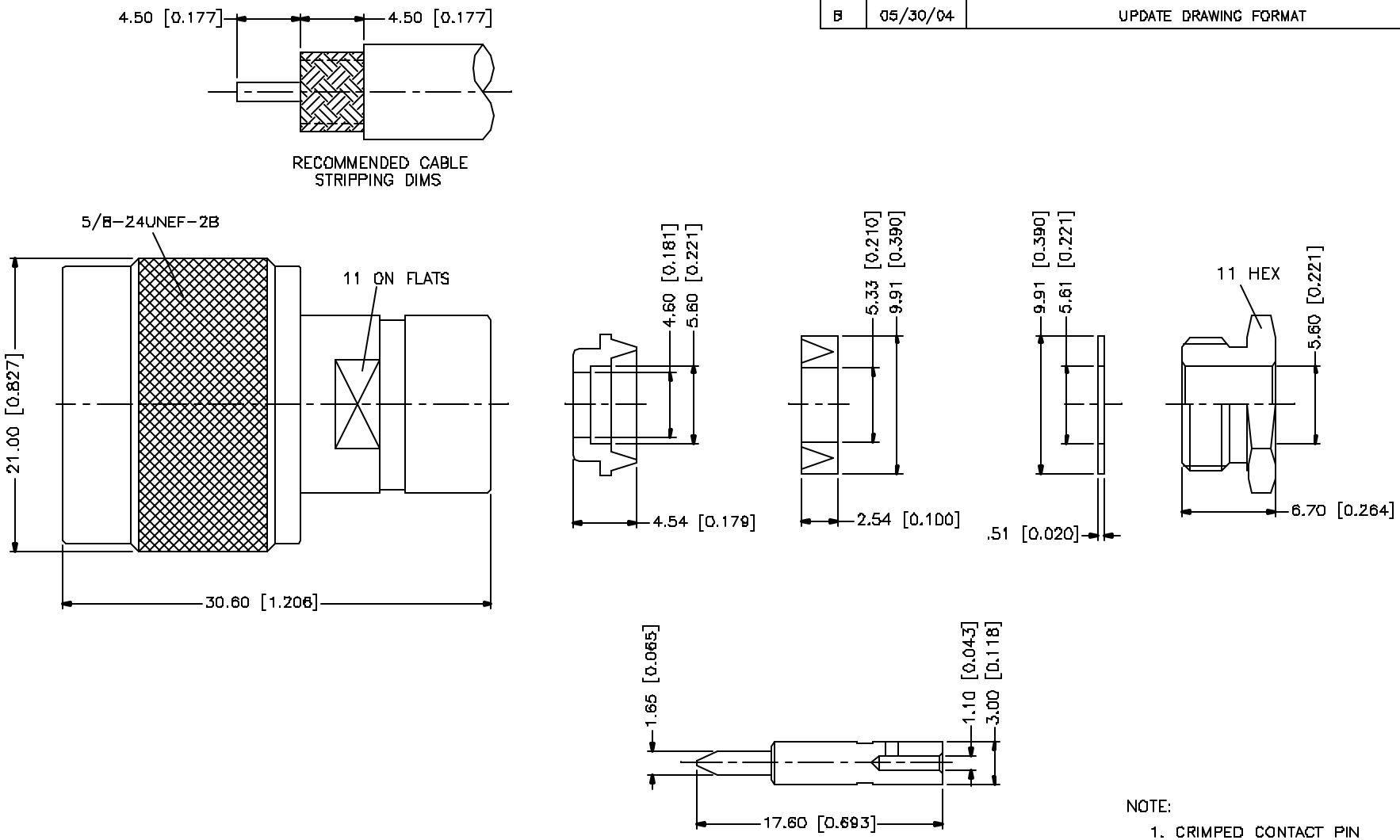

NOTE:

1. CRIMPED CONTACT PIN HEX CRIMP SIZE .100" OR SOLDER.

	DESCRIPTION	MATERIAL	FINISH	QTY
8				
7	HEX NUT	BRASS	NEXCOTE	1
6	WASHER	BRASS	NEXCOTE	1
5	GASKET	SILICONE	RED	1
4	BRAID CLAMP	BRASS	NEXCOTE	1
3	CONTACT PIN	BRASS	GOLD	1
2	INSULATOR	TEFLON	NATURAL	1
1	BODY/SHELL	BRASS	NEXCOTE	1

UNLESS OTHERWISE SPECIFIED DIMENSIONS ARE IN MILLIMETERS. DIMENSIONS IN [ ] ARE IN INCHES AND FOR CUSTOMER REFERANCE ONLY.

UNLESS OTHERWISE SPECIFIED TOLERANCES FOR MILLIMETERS ARE:
0.5 – 6mm ± 0.20mm
6 – 30mm ± 0.40mm
30 – 120mm ± 0.50mm

UNLESS OTHERWISE SPECIFIED TOLERANCES FOR INCHES ARE:
.020 – .315 = ± 0.007"
.315 – 1.180 = ± 0.015"
1.180 – 4.724 = ± 0.020"

DO NOT SCALE DRAWING

APPROVALS		DATE
DRAWN	G.R.S.	05/30/04
CHECKED		
ISSUED		
SHEET	1 OF 1	

CAD FILE C:/172/172111.DWG

Amphenol Connex

PART DESCRIPTION
N CLAMP PLUG
(FOR RG-58C/U, 58/U, 142A/U, 223/U CABLE)

PART NO. 172111

DWG NO. 172111.DWG | REV. B | SIZE A | SCALE NA